APPROVAL SHEET

ITEM	SK Broadband Bluetooth Remote
DESCRIPTION	Smart3 STB
PART NUMBER	BRM-BA03
RS MODEL	RD12F00
BUYER	SKB
DATE	2024.08.13
RCU VERSION	1.3
DOC VERSION	0.17

MAKER : REMOTE SOLUTION CO.,LTD.

Writer	EE	ME	Design	Software	Approval
2024.08.13	2024.08.13	2024.08.13	2024.08.13	2024.08.13	2024.08.13

DATE : 2024.08.13

REMOTE SOLUTION CO.,LTD.

FACTORY & HEAD OFFICE
92,CHOGOKRI, NAMMYUN, KIMCHON CITY, KYUNGBUK, KOREA
TEL : +82-54-420-4520
FAX : +82-54-420-4530

History

RCU Ver	Doc Ver	Date	Change Part	Description	Page
1.3	0.14	23.07.25	**Design**	Changes to the BACK LABEL specification Before After	33~38
	0.15	23.11.17	**design**	1. Top case "NUGU" logo delete 2. Manual Change Before After	33~38
	0.16	24.03.25	**Design**	- Changes to manual specifications Before After	33~38
	0.17	24.08.13	design	- Changes to manual specifications 변경 전 변경 후 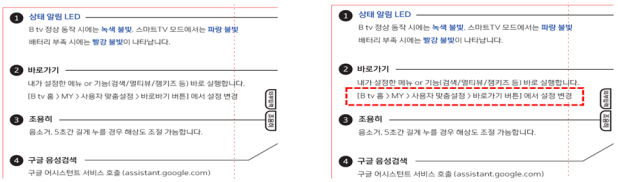 	33~38

History

RCU Ver	Doc Ver	Date	Change Part	Description	Page
1.0	0.1	21.05.24		Initial	
	0.2	21.06.23	**Instrument**	- Drawing update	39~53
	0.3	21.07.22	**design**	- Manual confirmation	33~38
1.1	0.4	21.08.23	**Software**	- Manufacture date applied (applied to S/N field of DIS)	9~23
	0.5	21.08.27	**Software**	B/list update	62~69
	0.6	22.01.03	**Design**	- Apply the final backlabel specification for rendering Before After	-
	0.7	22.06.10	**Software**	- Soft specification typo correction (RF Protocol part) Before : RTL8762CKF (Bluetooth v4.2: Single-Mode BLE) After : RTL8762CKF (Bluetooth v5.0: Single-Mode BLE)	10
	0.8	22.09.19	**Design**	Add spec book mini manual	37
	0.9	22.10.04	**Design**	1. Changed back label manufacturing country (Made in Korea --> Made in China) 2. Change PASSED Label (RS PASSED KWON Y B --> PASSED MADE IN CHINA) 3. Rendering Changes	33~38
1.2	0.10	22.10.31	**Software**	– Changed History: iSet upgrade, operation improvements, TV IRDB updates (59 types)	9~23 62~69
	0.11	22.11.18	**Design**	1. Case BI change (B tv) CASE 변경전 / CASE 변경후 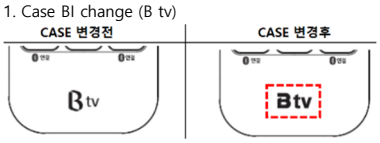 2. Ink change (Cool Gray 3C reliability Ink) 3. Manual BI Change MANUAL 변경전 / MANUAL 변경후 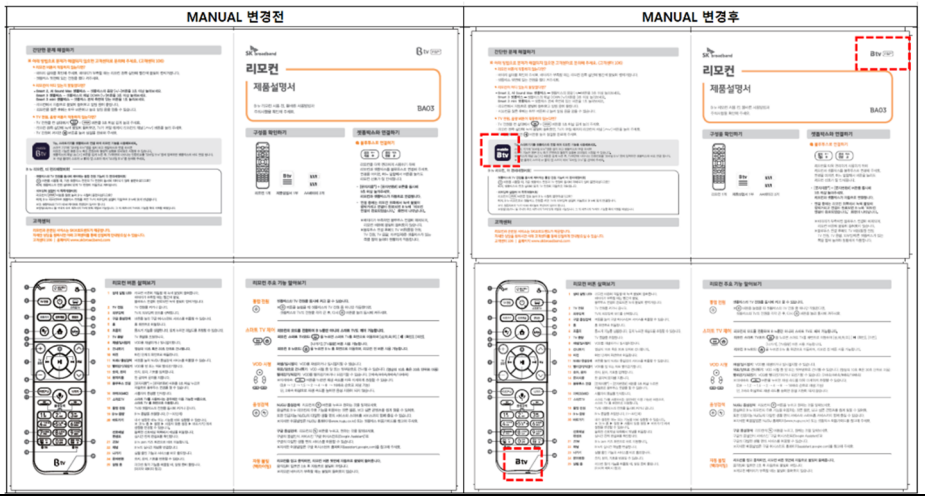	33~38
	0.12	22.12.15	**Design**	manual color change (Orange color -> Blue color) **Before** **After** 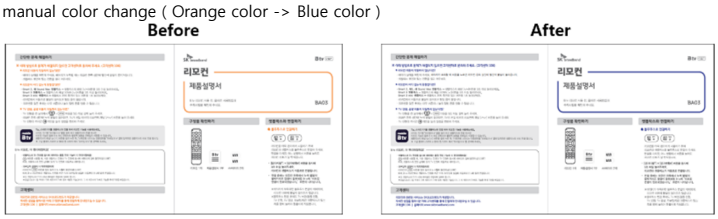	33~38
1.3	0.13	23.05.23	**Software**	- Battery information transmission scenario - RCU Low battery scenario - Back Light scenario - Smart TV LED color scenario	9~23 62~69

Product Design

REMOTE SOLUTION CO., LTD.

INSTITUTION : 2021.05.24	SPECIFICATION	MODEL NO :	1
REFORM :			
DECISION : 2024.08.13	(TRANSMITTER REMOCON)	RD12F00	69

==== INDEX ====

NO	CONTENTS	PAGE
1.	Application Range	2
2.	Product Specifications	2 ~ 6
3.	Reliability Tests	7 ~ 8
4.	Software Specification	9 ~ 23
5.	Part List (Mechanical , Electronical)	24 ~ 25
6.	Schematics	26 ~ 28
7.	PCB Diagram	29 ~ 31
8	PCB Outline Specification	32
9.	Design Specification	33 ~ 38
10	Mechanical Specification	39 ~ 53
11.	Packaging Specification	54
12	Assembling Specification	55
13	Rubber Tension Test	56
14	Manufacturing Process Flow Chart	57 ~ 59
15	Manufacturing Control Plan	60 ~ 61
16	TV Brand List	62 ~ 65
17	Grouping brand list	66 ~ 69

1. Coverage : This product is manufactured as a remote solution and this specification applies to SK Broadband AI2/UHD4 STB remote control.

2. Product Specifications

2-1 Mechanical

2-1-1 Appearance

2-1-1-1 There should be no issue for Button Locking

2-1-1-2 There should be no stiff and looseness when opening or closing the battery cover

2-1-1-3 There should be no issue for attachment of label

2-1-1-4 There should be no spread of printing in RCU

2-1-1-5 There should be no warpage in RCU

2-1-1-6 There should be no stick effect from rubber

2-1-1-7 Spring turn count should be maching to Spec

2-1-1-8 There should be no electricity issue because of deformation of spring

2-1-1-9 Spring should be horizontal when inserting the Battery

2-1-1-10 Edge of Spring should be rounded

2-1-1-11 There should be no sharpness in case

2-1-1-12 The Printing of product should be same as product specification

2-1-1-13 When 5Kg of force is applied to each part of the body for 3 seconds, there should be no structural defects such as destruction

2-1-1-14 No other specific matters

2-1-2 Decomposition Structure

2-1-2-1 Confirmation of internal parts after disassembly should match specification (drawing)

2-1-2-2 There should be no abnormality when confirming the incorporation of components and soldering condition after disassembly

2-1-2-3 There should be no touching of Mechanical parts and Electronical parts

2-1-2-4 It should match the drawing (specification) when comparing with the parts list

2-1-2-5 PCB Print contents should match the drawings

2-1-2-6 Circuit components should use specified standard products

2-1-2-7 The Carbon Contact should not have Flux

2-1-3 Button Specification

2-1-3-1 Touch Feeling : There is no defect when key button is pressed vertically

2-1-3-2 Operating Force : Metal Dome 110g±20g

Rubber Key : Less then 200g±30g (Small Key)

Rubber Key : Less then 210g±30g (Large Key)

2-1-3-3 Operating distance : 0.5±0.1 mm

2-1-3-4 Return force : more then 40% of the operating force Spec[Key center measurement]

2-1-3-5 Load: There should no defect PCB and other general , when applied for 3 seconds with a force of 3Kg vertically

2-1-4 Battery Specifications

2-1-4-1 There should no defect when battery injecting and ejecting

2-1-4-2 There should no defect of electronical contact when battery insert

2-1-4-3 Gap distance : Gap distance between (+) side and (–) side should be less than 0.4mm

2-1-4-4 Battery should not be energized in reverse

2-1-4-5 There should no battery heating or deformation of the mechanic when reversed battery inserting

2-1-4-6 There should be no problem when checking battery compatibility by manufacturer [Compatibility by Size: AAA(L=44.2~43.4, Φ10.5 ~9.5)] , AA (L=50.5~49.0 , Φ14.5 ~ 13.5)]

2-1-5 Dimension

Outside dimension of the product : must meet individual approval specs (overall Length Tolerance:±0.8)

GAP (standard 0.3 mm) - GAP: Front knob and side gap should be less than 0.6 mm.

However, only the total length is measured during import inspection

Product Size : 48mm*175mm*23mm

Weight : 131.7(±2)g (With AA Battery x 2EA)

2-2 Electrical properties

2-2-1 General Operating Test

2-2-1-1 There should be no problem in Button operation

2-2-1-2 In case of remote controller with Multi Brand, there should be no problem in operation by each other maker

2-2-1-3 Other buttons does not work when Button is operated

2-2-1-4 There should be no abnormality in continuous key operation

2-2-1-5 In case of various LEDs, there should be no problem when checking the brightness and blurring. [Set limit sample if necessary]

2-2-2 Current consumption

function	enter	Condition	SPEC		
			2.2V	2.5V	3.0V
Before leakage current pairing	Leave for 1 minute after power is applied	Average	20uA Below	20uA Below	20uA Below
After leakage current pairing	Leave for 1 minute after power is applied	Average	50uA Below	50uA Below	50uA Below
IR transmission	TV Volum (+) button 1 minute movement	Average	30mA Below	30mA Below	30mA Below
RF transmission	Volum (+) button 1 minute movement	Average	5mA Below	5mA Below	5mA Below
Buzzer	Text erase + 4	Peak	60mA Below	60mA Below	60mA Below
Backight	Remote control angle 40˚ or more	Peak	OFF	20mA Below	20mA Below
Voice search	Voice search button	Peak	10mA Below	10mA Below	10mA Below

2-2-3 High Voltage : When inputting 3.4V voltage, there should be no abnormality in remote control key operation

2-2-4 IR LED Current(2ohm) : Over 300mA (2 Battery)

2-2-5 Power Consumption : Less then 300mW (Battery 3.0V)

2-2-6 Oscillation frequency : Input Voltage : D.C 3.0V (Power supply 3.0V)
: 40.00 Mhz ± 10ppm

2-2-7 Oscillation stop voltage: Less than 1.9V

2-2-8 All Key Operation Test

2-2-8-1 All Key operation is abnormal or not checked

2-2-8-2 There should be no abnormality when operating each key ON / OFF more than 10 times
[ON / OFF every 1 second]

2-2-9 Decompression / Boost Operating Voltage

2-2-9-1 There should be no problem in operation when repeating 5 times at 2.2V ~ 3.4V

2-2-9-2 Check the voltage at 0V starting operation

2-2-9-3 Check the operation stop voltage at the voltage drop from 2.2V
[However, when there is no regulation, it should be less than 2.2V]

2-2-10 Contact resistance

2-2-10-1 Conduction / Carbon is inspected according to specification
[Conduction: 200Ω or less / Carbon: 300Ω or less]

2-2-11 Transmission Format (Output Wave Form)

2-2-11-1 Format : uPD6122

2-2-11-2 Carrier : 37.9kHz ± 3%

2-2-11-3 Frame : Interval(TF) : 108ms ± 3%

2-2-12 Operating distance and declination Operating distance:

2-2-12-1 Horizontal deflection (on optical axis) Straight line distance

When the receiver of the SET and the Remote Control Unit are horizontally or vertically on the optical axis

2-2-12-2 Remote control unit reference Horizontal deviation 15 ° (left, right, top, bottom) reaching distance (SET fixed)

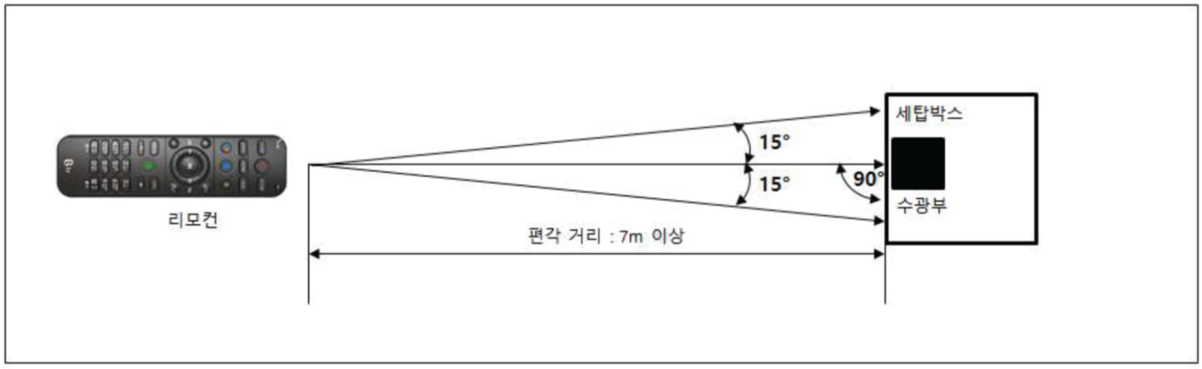

2-2-12-3 RF straight line reach

RF Button : 7m

RF Voice transmission : 7m

- Measure using the buyer's set-top box. (Illumination : 200Lux, Temp. +25℃)

2-2-13 Buzzer Spec

Decibel : Measured at 10Cm distance using decibel meter: 85dB ±10dB [Applied voltage 3.0V]

(Measured using 1KHz test sound: 75±6dB) [Applied voltage 3.0V

3. Environmental characteristics

3-1 Printing test

3-1-1 Eraser test

3-1-1-1 No abnormality by carrying out the round trip 50 times with the load of 1.0Kg with the eraser

3-1-1-2 There should be no abnormality by scratching the printed surface with the fingernail 5 times.

3-1-2 Tape Test

3-1-2-1 After printing, coating area is attached with Tape with 1Kg load, it is peeled at 45 ° and tested after 3 times test

3-1-3 Alcohol test

3-1-3-1 Gently apply alcohol to the gauze and perform 20 ~ 50 reciprocations with a load of 1 kg. (CASE: 20 times, RUBBER: 50 times)

3-1-4 Coating property

3-1-4-1 After leaving 2HR at room temperature, 3M SCOTCH Brand No. 600 or more TAPE equivalent or better After close contact, do not pull instantly at 15° from flat surface.

3-2 Reliability Test

3-2-1 Load Life Test

3-2-1-1 After inserting the batteries and operating at a rate of 30 ~ 60 times per minute and operating 100,000 times : There should be no abnormality in function when inspecting.

3-2-2 High temperature operation test

3-2-2-1 50 ° C ± 3 ° C, humidity 65%, and left for 24 hours
The operation inspection shall be carried out at intervals of 12 hours, so that there should be no abnormality in function and appearance

3-2-3 Low-temperature operation test

3-2-3-1 Put a rated load in a thermostat of -5 ± 3 ° C and leave it for 24 hours
The operation inspection shall be carried out at intervals of 12 hours, so that there should be no abnormality in function and appearance.

3-2-4 High temperature and high humidity operation test

3-2-4-1 Leave at rated temperature of 50 ± 3 ° C and humidity 80% for 24 hours
The operation inspection shall be carried out at intervals of 12 hours, so that there should be no abnormality in function and appearance.

3-2-5 temperature preservation test

3-2-5-1 Leave in a thermostatic chamber at 70 ± 3 ° C for 48 hours in a no-load state, and eave it at room temperature and humidity for 1 hour
There should be no abnormality in function and appearance at the time of inspection

3-2-6 Cold storage test

3-2-6-1 Allow to stand for 48 hours in a no-load state in a thermostat at -20 ± 3 ° C for 1 hour
There should be no abnormality in function and appearance at the time of inspection

3-2-7 High temperature and high humidity preservation test

3-2-6-1 Temperature 50 ± 3 ℃ Leave in a constant temperature chamber of 95% humidity for 48 hours in a no-load state, and leave for one hour at normal temperature and humidity
There should be no abnormality in function and appearance at the time of inspection

3-2-8 Thermal shock test

3-2-8-1 Temperature: 70 ± 3 ℃ ~ -20 ± 3 ℃, 50 cycles at intervals of 30 minutes, left at room temperature and humidity for 1 hour
There should be no abnormality in function and appearance at the time of inspection.

3-2-9 Vibration test

3-2-9-1 Vibration frequency: 10Hz~55Hz(7.5min) → 55Hz(2Hrs) → 55Hz~10Hz(7.5min), amplitude: 1.5mm, As a condition, there should be no abnormalities during inspection after conducting X, Y, Z directions.

3-2-10 Drop Test

3-2-10-1 Tested on Hardwood 6 times, once every 4 times [Dropping at 100cm after battery insertion]

3-2-10-1-1 No Top / Bottom Widening and Crack

3-2-10-1-2 No defective energization due to spring deformation

3-2-10-1-3 There should be no stick phenomenon due to the rubber deviation.

3-2-10-1-4 There should be no other unusual phenomenon.

3-2-11 Static test

3-2-11-1 Place the R / C with the battery inserted on the copper plate and perform the static test

3-2-11-1-1 ±10kV : No problem in operation

3-2-11-1-2 ±12kV : No destruction

REMOTE SOLUTION CO., LTD.

INSTITUTION : 2021.05.24	SPECIFICATION	MODEL NO :	9
REFORM :			
DECISION : 2024.08.13	(TRANSMITTER REMOCON)	RD12F00	69

4. Software Specification (1/15)

RCU Key code table

SKB Smart TV Control STB RCU - Rev0.06
Device Name : BRM_BT12_XXX, BRM_BA03_XXX *RemoteSolution
Device Name : BMM_BT12_XXX, BMM_BA03_XXX *Movon

Position	No	Key	Code				USB HID Usage Name		Description
			IR[NEC Simple repeat]		RF(BLE)				
		Key name	**MODE1** CUSTOM 0x807F	**MODE2** CUSTOM 0xF5A0	Page	Usage ID	Keyboard Page (0x07)	Consumer Page (0x0C)	
Side	1	외부입력	[0x01FE]+[0x0BF4]	[0x01FE]+[0x0BF4]					dedicated TV only key Default Samsung,LG [Source] Navi keys is working TV
	2	조용히	0x45BA	0x45AB	0x07	0x004500			
	3	Btv 음량+	0x43B6	0x43CB	0x07	0x004300			
	4	Btv 음량-	0x42BD	0x42DB	0x07	0x004200			
Front	5	통합전원	TV 전원 + Btv 전원 + RCU VER	TV 전원 + Btv 전원 + RCU VER					ordere: TV 전원 + Btv 전원 + RCU VER + key press: TV 전원 + key release: Btv 전원 + RCU VER
	6	TV 전원	Samsung + LG	Samsung + LG					dedicated TV only key Default Samsung,LG
	7	스마트TV	Samsung + LG	Samsung + LG					dedicated TV only key Default Samsung,LG
	8	바로가기	0x58A7	0x587A	0x07	0x005800			
	9	선호채널	0x56A9	0x569A	0x07	0x005600			
	10	편성표	0x6D92	0x6D29	0x07	0x006D00			
	11	검색	0x4FB0	0x4F0B	0x07	0x004F00			BT12/BT12E Only
	12	Google Assistant	0xD12E	0xD1E2	0x0C	0x0221		AC Search	BA03/BA03E Only
	13	홈	0x02FD	0x02DF	0x07	0x000200			order: HOME -> BRK -> BATT INFO
	14	Zem KIDS	0x59A6	0x596A	0x07	0x005900			
	15	TV 음량+	Samsung + LG	Samsung + LG					dedicated TV only key Default Samsung,LG
	16	TV 음량-	Samsung + LG	Samsung + LG					
	17	▲(상)	0x49B6	0x496B	0x07	0x004900			
	18	▼(하)	0x4AB5	0x4A5B	0x07	0x004A00			
	19	◀(좌)/ I ◀◀뒤건너뛰기	0x4BB4	0x4B4B	0x07	0x004B00			
	20	▶(우)/▶▶ I (앞건너뛰기)	0x4CB3	0x4C3B	0x07	0x004C00			
	21	OK/▶/ II (재생/일시정지)	0x46B9	0x469B	0x0C	0x0041		Menu Pick	
	22	채널∧	0x40BF	0x40FB	0x07	0x004000			
	23	채널∨	0x41BE	0x41EB	0x07	0x004100			
	24	이전	0x4EB1	0x4E1B	0x07	0x004E00			TV code output in Smart TV mode
	25	나가기	0x34CB	0x34BC	0x07	0x003400			TV code output in Smart TV mode
	26	마이크	0xD12E	0xD1E2	0x07	0x002300			
	27	◀◀(되감기)/ R	0x609F	0x60F9	0x07	0x006000			
	28	▶▶(빨리감기) / B	0x639C	0x63C9	0x07	0x006300			
	29	1	0x21DE	0x21ED	0x07	0x002100			
	30	2	0x22DD	0x22DD	0x07	0x002200			
	31	3	0x23DC	0x23CD	0x07	0x002300			
	32	4	0x24DB	0x24BD	0x07	0x002400			
	33	5	0x25DA	0x25AD	0x07	0x002500			
	34	6	0x26D9	0x269D	0x07	0x002600			
	35	7	0x27D8	0x278D	0x07	0x002700			
	36	8	0x28D7	0x287D	0x07	0x002800			
	37	9	0x29D6	0x296D	0x07	0x002900			
	38	*/문자지움	0x2AD5	0x2A5D	0x07	0x002A00			
	39	0	0x20DF	0x20FD	0x07	0x002000			
	40	#/문자변환	0x2BD4	0x2B4D	0x07	0x002B00			
특수 키코드	41	Btv 전원	0x01FE	0x01EF	0x07	0x000100			Transmitted together when the[All Power] key is press Transmit to IR or BT by changing IR/BT mode
	42	Normal Battery	0x3AC5	0x3A5C	0x07	0x003A00+0x00FFFF			
	43	Low Battery	0x3BC4	0x3B4C	0x07	0x003B00+0x00FFFF			
	44	Empty Battery	0x3CC3	0x3C3C	0x07	0x003C00+0x00FFFF			
	45	Break Data Code	0xFF00	0xFF00	0x07	0x00FFFF			IR: only Home key, BT: All key
	46	RCU Ver#3	0xF3C0~0xF3C4 0xF3CA~0xF3CD 0xF3D0~0xF3D4 0xF3DA~0xF3DD						리모컨 제조사별 코드(RS) 0xF3C0~0xF3C4 : BT12 0xF3CA~0xF3CD : BT12E(충전식) 0xF3D0~0xF3D4 : BA03 0xF3DA~0xF3DD : BA03E(충전식) * 하위 4bit 버전 코드 (0~4 / A~D)
	47	RCU Ver#4	0xF4C0~0xF4C4 0xF4CA~0xF4CD 0xF4D0~0xF4D4 0xF4DA~0xF4DD						리모컨 제조사별 코드(모본) 0xF4C0~0xF4C4 : BT12 0xF4CA~0xF4CD : BT12E(충전식) 0xF4D0~0xF4D4 : BA03 0xF4DA~0xF4DD : BA03E(충전식) * 하위 4bit 버전 코드 (0~A / A~D)
	48	Drag Up	0x8778	0x8787	0x07	0x008700+0x00FFFF			
	49	Drag Down	0x827D	0x82D7	0x07	0x008200+0x00FFFF			
	50	Drag Left	0x837C	0x83C7	0x07	0x008300+0x00FFFF			
	51	Drag Right	0x847B	0x84B7	0x07	0x008400+0x00FFFF			
	52	Voice Limit	0xD22D	0xD2D2					
	53	Btv control mode	0x6699	0x6699	0x07	0x006600			
	54	Smart TV control mode	0x6798	0x6789	0x07	0x006700			
	55	Smart TV control mode noti	0x6897	0x6879	0x07	0x006800			
	56	Battery Charging	0x6E91	0x6E19	0x07	0x006E00			BT12E/BA03E Only
	57	Battery Charging Completed	0x6F90	0x6F09	0x07	0x006F00			BT12E/BA03E Only

BT12/BT12E

BA03/BA03E

기능		기능	키조합	입력	비고
키 조합 기능	1	Unpairing	[*] + [홈]	3sec	remove pairing information
	2	Re-Pairing	[*] + [#]	3sec	try pairing after removing pairing information
	3	TV Set (Manual)	[스마트TV] + [외부입력]	3sec	setup your TV with the numering keys
	4	TV Set (Auto Search)	[스마트TV] + [외부입력]	3sec	setup your TV using CH+/- key
	5	TV Set(Grouping)	그룹핑 번호키[1~9] + [스마트TV]	3sec	setup your TV with CH+/- key in TV group
	6	IR Code Learn	[TV 전원] + [OK]	3sec	BT06/07 is not supported
	7	Code Read Out	[스마트TV] + [외부입력]	3sec	press [편성표] after entry setting mode
	8	Change BT-IR mode (BT)	[*] + [1]	3sec	
	9	Change BT-IR mode (IR)	[*] + [2]	3sec	~~Not allowed pairing/keep pairing9~~
	10	Factory Default	[*] + [3]	3sec	
	11	Buzzer Test	[*] + [4]	3sec	stop buzzer when press any key
	12	Backlight On/Off	[*] + [5]	3sec	On/Off toggle(Default: On), On: LED twice/Off: LED 4-tiems blink
	13	Drag Up	[*] + [UP]	Immediately	see operation scenario
	14	Drag Down	[*] + [DOWN]	Immediately	
	15	Drag Left	[*] + [LEFT]	Immediately	
	16	Drag Right	[*] + [RIGHT]	Immediately	
	17	Android Bugreport	[BACK] + [OK]	5sec	BACK is IR code, OK is BLE code, after 3sec LED blink 1-time

4. Software Specification (2/15)

RF Protocol

1. BLE Device
RTL8762CKF (Bluetooth v5.0: Single-Mode BLE)
2. BLE Profile & Service
GAP, GATT
HID over GATT Profile
~~Find Me Profile(call RCU)~~ --> inclued IAS
HIDS(HID Service)
Realtek OTA Update Service
~~Voice transmission service~~ --> Realtek mSBC uses HIDS because it is a HOGP type
BAS(Battery Service)
DIS(Device Information Service)
~~ATVV5(Android TV Voice Service) - Google Assistant~~
iSet Service - TV auto setup & power/input sync
~~ScPS(Scan Parameters Service) - undecided~~
~~Bond Management Service - undecided~~
IAS(Immediate Alert Service) - call RCU
~~LLS(Link Loss Service) - undecided~~
~~TPS(Tx Power Service) - undecided~~
3. Vendor ID / Product ID
Vendor ID : 0x005D (Realtek)
Product ID : 0x0003(BT12/BT12E), 0x0004(BA03/BA03E)
4. GAP Appearance Value(Device Class)
0x0180 : Generic Remote Control
5. BD Address
14 4E 34 xx xx xx (14 4E 34 assigned by RemoteSolution)
20 44 41 xx xx xx (20 44 41 assigned by RemoteSolution)
00 13 7B xx xx xx (00 13 7B assigned by Movon)
40 19 20 xx xx xx (40 19 20 assigned by Movon added)
6. Device Name
BRM_BT12_XXX (BLE), BRM_BA03_XXX(BLE) **~~BRM_Audio11 (A2DP)~~**
B : B tv, ~~B : B tv,~~
RM : RemoteSolution, MM : Movon, UE : UEI ~~RM : RemoteSolution, MM : Movon, UE : UEI~~
XXX : MAC Address last 3 characters
7. Method of pairing
Just Works
8. Voice feature
NUGU: 120byte mSBC (60bytes transmitted twice, 57+3 byte, 4.2 Extended LE not used.)
ATVV: 134byte ADPCM (Details: "ATV Voice" Sheet, only BA03E)
9. HID protocol table

*** HID Key press & hold code on ATT - Report ID(0x80)**

NUM	Field	Description	Values	Size	Direction
1	Opcode	Notification	0x1B	1byte	RCU -> STB
2	Att Handle	Handle	0x0000 – 0xFFFF	2byte	
3	Payload	Keycode	Usage ID	3byte	

Ex) When [B tv power] key is pressed: 0x00, 0x01, 0x00
When any key is released: 0x00, 0xFF, 0xFF

*** HID Consumer Key code on ATT - Report ID(0x03)**

NUM	Field	Description	Values	Size	Direction
1	Opcode	Notification	0x1B	1byte	RCU -> STB
2	Att Handle	Handle	0x0000 – 0xFFFF	2byte	
3	Payload	Keycode	Usage ID	2byte	
4			0x0000	2byte	

Release key code: 0x00 00 00 00

*** HID Voice Search code on ATT - Report ID(0x85)**

NUM	Field	Description	Values	Size	Direction
1	Opcode	Notification	0x1B	1byte	RCU -> STB
2	Att Handle	Handle	0x0000 – 0xFFFF	2byte	
3	Payload	Reserved	0x00	1byte	
4		Start voice	0x23	1byte	
5		Keycode 2	0x00	1byte	

Release key code: 0x00 23 FF

*** HID Mic Start on ATT - Report ID(0x85)**

NUM	Field	Description	Values	Size	Direction
1	Opcode	Write Request	0x12	1byte	STB -> RCU
2	Att Handle	Handle	0x0000 – 0xFFFF	2byte	
3	Payload	Reserved	0x00	1byte	
4		MIC Start	0x26	1byte	
5		Keycode 2	0x00	1byte	

*** HID Mic Stop on ATT - Report ID(0x85)**

NUM	Field	Description	Values	Size	Direction
1	Opcode	Write Request	0x12	1byte	STB -> RCU
2	Att Handle	Handle	0x0000 – 0xFFFF	2byte	
3	Payload	Reserved	0x00	1byte	
4		MIC Stop	0x27	1byte	
5		Keycode 2	0x00	1byte	

~~* HID RCU Unpairing on ATT - Report ID(0x81)~~

NUM	Field	Description	Values	Size	Direction
1	Opcode	Write Request	0x12	1byte	STB -> RCU
2	Att Handle	Handle	0x0000 – 0xFFFF	2byte	
3	Payload	Reserved	0x00	1byte	
4		Unpaired	0x2A	1byte	
5		Keycode 2	0x00	1byte	

* The RCU removes the pairing information of the RCU when it receiveds the command from the STB.

*** Voice data on ATT - Report ID(0xF8)**

NUM	Field	Description	Values	Size	Direction
1	Opcode	Notification	0x1B	1byte	RCU -> STB
2	Att Handle	Handle	0x0000 – 0xFFFF	2byte	
3	Payload	Voice data	0xXX....	120byte	

~~* QuickSet data on ATT - Report ID(0x86)~~

NUM	Field	Description	Values	Size	Direction
1	Opcode	Notification	0x1B	1byte	RCU -> STB
2	Att Handle	Handle	0x0000 – 0xFFFF	2byte	
3	Payload	Sequence	0x00 – 0xFF	1byte	
4		Data	0xXX....	max	

~~* QuickSet data on ATT - Report ID(0x86)~~

NUM	Field	Description	Values	Size	Direction
1	Opcode	Write Request	0x12	1byte	STB -> RCU
2	Att Handle	Handle	0x0000 – 0xFFFF	2byte	
3	Payload	Sequence	0x00 – 0xFF	1byte	
4		Data	0xXX....	max	

10. Advertisement data format
GAP ADTYPE FLAG
Discovery Mode: LE General Discoverable Mode | BR/EDR Not Supported
GAP ADTYPE LOCAL NAME
see 6 section
GAP ADTYPE 16BIT COMPLETE
Service: 0x1812(HID)
GAP ADTYPE APPEARANCE
see 4 section

11. Scan response data format
GAP ADTYPE LOCAL NAME
see 6 section
GAP ADTYPE APPEARANCE
see 4 section

12. Connection Parameters

Connection interval(IDLE)	Connection interval(Voice)	Connection interval(OTA)
Minimum: 11.25ms	Minimum: 11.25ms	Minimum: ~~7.5ms~~ 11.25ms
Maximum: 11.25ms	Maximum: 11.25ms	Maximum: ~~7.5ms~~ 11.25ms
Slave Latency: 133	Slave Latency: 133	Slave Latency: 0
Supervision timeout: 10sec	Supervision timeout: 10sec	Supervision timeout: 10sec

13. Advertising interval

Pairing 시 ADV			
		interval(min/max)	duration
Step1.	undirect	50ms	20s
Step2.	Standby state		
Reconnect 시 ADV_DIRECT			
		interval(min/max)	duration
Step1.	direct (high duty)	1.87ms	1.28s
Step2.	direct (low duty)	30ms	5s
Step3.	direct (idle low duty)	1.5s	Continue (1.5s per 1 cycle)

*When inserting/removing a battery(or connect charge cable):
Depending on the paired / un-paired state, the above scheme works.
If paired after RCU cold boot, High duty DIRECT_ADV starts after 12 seconds regardless of whether or not there is a key input.
* When connecting, when entering Any Key during ADV_DIRECT:
Regardless of the current step, if there is a key input, it is immediately executed again from Step1 (high duty ADV_DIRECT).

14. BT key code Interval
BT key press interval: 300ms (continuous key), 80ms (Macro key)
BT release key code: 30ms
* continuous Key(generate during long press), Macro key(Key code sent automatically. Ex. 홈/Battery Info, 전원/Version Info)
* Based on 11.25ms interval, the following values apply: 300ms(303.75ms), 80ms(78.75ms), 30ms (33.75ms)
* In IR mode, it is necessary to secure sufficient gap between key code transmissions.

15. DIS(Device Information Service)

Property	Value	Value(ex: RS)	Value(ex: Movon)
Serial Number String	Manufacturing date	20220520	20220520
Manufacturer Name String	Manufacturer	RemoteSolution Co.,LTD.	Movon corporation
Model Number String	Model No	BRM_BT12 / BRM_BT12E	BMM_BT12 / BMM_BT12E
Firmware Revision String	F/W Revision	1.0	1.0
Software Revision String	Rom Patch Revison	1.0.552.8	1.0.552.8
Hardware Revision String	H/W Revision	1.0	1.0
System ID	IEEE 64bit ID(with OUI)	xxxxxxFEFF344E14	xxxxxxFEFF201940

* Serial Number String: The BT chipset MAC is applied to the remote control without the manufacturing date

4. Software Specification (3/15)

[i-SET Protocol]

* i-Set Service Class UUID : 0000FFE0-0000-1000-8000-00805F9B34FB

* i-Set Command - UUID : 0000FFE1-0000-1000-8000-00805F9B34FB

NUM	Field	Description	Values	Size	Direction
1	Opcode	Write Request	0x12	1byte	STB -> RCU
2	Att Handle	Handle	0x0000 ~ 0xFFFF	2byte	
3	Payload	Command	0x00: i-Set Stop 0x01: i-Set Start 0x02: STB screen off 0x03: STB screen on 0x04: i-Set Get TV code 0x05: Unpairing - Not implemented in STB. 0x06: i-Set Sync Disable 0x07: i-Set Sync Enable	1byte	

* i-Set Command Response - UUID : 0000FFE1-0000-1000-8000-00805F9B34FB

NUM	Field	Description		Values		Size	Direction
1	Opcode	Notification		0x1b		1byte	RCU -> STB
2	Att Handle	Handle		0x0000 ~ 0xFFFF		2byte	
3	Payload	Result		0x00: NG 0x01: OK		1byte	
4		Error code Determined according to the check result, regardless of "Payload-Result".		0x00 : ISET_ERROR_NONE 0x01 : ISET_ERROR_CODE_TIMEOUT 0x02 : ISET_ERROR_CODE_CHKSUM_ERROR 0x03 : ISET_ERROR_CODE_INVALID_COMMAND 0x04 : ISET_ERROR_CODE_INVALID_EDID_FORMAT 0x05 : ISET_ERROR_CODE_UNKNOWN_VENDOR 0x06 : ISET_ERROR_CODE_IDENTICAL_VENDOR 0x07 : ISET_ERROR_CODE_INVALID_EDID_LENGTH 0x08 : ISET_ERROR_CODE_UNKNOWN_DEVICE 0x09 : ISET_ERROR_CODE_NONE_SEQ_ORDER		1byte	
5		TV	Set Type	0x00: ISET - only assigned when i-Set TV setup is OK 0x01: Manual(digit or autosearch) 0x02: IR Learning		1byte	
6			Code	0x0000 ~ 0xFFFF(TV set No) eg: Set No is 320	0x01 0x40	2byte	

* i-Set EDID Data - UUID : 0000FFE3-0000-1000-8000-00805F9B34FB

NUM	Field	Description	Values	Size	Direction
1	Opcode	Write Command	0x52	1byte	STB -> RCU
2	Att Handle	Handle	0x0000 ~ 0xFFFF	2byte	
3	Payload	EDID Parameters	0x00 ~ 0xFF	256byte	

* i-Set Key Notification - UUID : 0000FFE3-0000-1000-8000-00805F9B34FB

NUM	Field	Description		Values		Size	Direction
1	Opcode	Notification		0x1b		1byte	RCU -> STB
2	Att Handle	Handle		0x0000 ~ 0xFFFF		2byte	
3	Payload	Device Type		0x00 0x01 0x02 0x03 ~ 0xFF	STB TV Combination Device(STB + TV) RESERVED	1byte	
4		Physical Key		0x00 0x01 0x02 0x03 0x04 0x05 0x06 0x07 0x08 0x09 0x0A 0x0B 0x0C 0x0D 0x0E ~ 0xFF	All Power - Device Type: 0x02 Power Volume Up Volume Down Input(Source) Up Down Left Right OK Previous Exit Smart TV Menu Keys for Btv Reserved	1byte	
5		Function		0x00 0x01 0x02 ~ 0x08 0x09 0x0A ~ 0xFE 0xFF	TV Power Off TV Power On TV HDMI-1 ~ HDMI-7 TV Exit(Change Btv Control mode) Reserved Normal	1byte	
6		IR State		0x00 0x01 0x02	IR Tx Fail IR Tx Success IR Learn	1byte	

4. Software Specification (4/15)

RCU Operation Scenarios

BT mode: BLE connected, IR mode: BLE disconnected

Bluetooeh pairing scenario (BLE)

1. In the unpairing state, pressing any key(excluded key: TV전원/통합전원/TV음량+/-,외부입력) on the remote control will transmit the pairing start IR
2. After transmitting the IR code, the remote control enters Advertising Mode and switches to the pairing mode.
3. In Advertising Mode, LED blinks at 1s (ON: 250ms, OFF: 750ms) cycle.
   -Ignore entering the setting mode by voice search and key combination during pairing (however, unpairing and repairing are supported)
4. When the IR Trigger Code is received from the STB, it searches for Bluetooth devices and tries to pair with the remote control BLE.
5. When the audio BT is successfully paired with the remote control, LED Blink 5 times at 200ms (ON: 100ms, OFF: 100ms) cycle.
6. The remote controller ends Advertising after 20 seconds in BLE Advertising mode. And, Audio BT Discovery does not.
7. LED OFF when pairing fails

Bluetooth pairing reset (Unpairing) secenario

1. Press the [*] + [Home] keys for 3 seconds
2. When BT Unpair is completed normally, LED blinks 5 times quickly (ON: 100ms, OFF: 100ms)

Bluetooth re-pairing secenario

1. Press the [*] + [#] keys for 3 seconds
2. If BT is connected, RCU performs disconnection
3. Store the BT pairing information in the temporary area, and delete the paring information related to the BT stack.
4. Start BT pairing(always new pairing)
5. When pairing fails, the pairing information in the temporary area is resotred to the pairing area of the BT stack.

Operation scenario when not paired

1. Regardless of whether pairing is successful, all keys except voice search key operate as IR.
2. Attempt pairing when performing the following operation.
   2-1. Any Key(excluded key: TV전원/통합전원/TV음량+/-,외부입력) is pressed
   2-2. Enter [*] + [#] for 3sec

Operation scenario when paired

1. TV key (TV전원 / TV음량+/- / 외부입력) operates irrespective of whether pairing is successful or not.
2. All other keys operate as BT. (But TV전원/통합전원/TV음량+/-,외부입력 key works only with IR)
3. In the case of BT disconnection in pairing state, all keys operate as IR.
   3-1. However, re-pairing is performed when the voice (NUGU) or [G/A] key is pressed. (Same operation as pressing the [*] +[#] keys for 3 seconds)

All power operation scenario

1. When the [통합전원] key is pressed, it is output in the following order.
   1.1 During Key Press: Transmit TV power code (toggle, discret, learning)
      - When release key before transmitted 3-frame, It must be transmitted at least 3-frames.
   1.2 After Key release: Btv Power code -> RCU version code -> iSet HDMI Macro
2. TV power code classification
   2.1 Toggle: When the TV power code is toggled during manual setting or iSet setting
   2.2 Discrete: When the TV power code is discrete by the iSet setting
   2.3 IR learning: In case of learning IR on the [TV전원] button
3. iSet Macro
   3.1 Output when iSet is set and TV's input code is discrete code

* If iSet is wroked, see Section 4 of the "iSet Operation Scenario" sheet.

Battery information transmission scenario

1. Battery level transmission when the [home] key is pressed (in BT mode, BT / IR mode, IR code)
2. Detect voltage range: Min/Max Voltage divided into 3 levels (Empty / Low / Normal)

(BT12/BA03)	(BT12E/BA03E): Check 'Battary & Charge' sheet
2-1. Normal: 2.4V or more-green LED	2-1. Normal : 40% or more - green LED
2-2. Low: More than 2.2V ~ less than 2.4V-green LED	2-2. Low : 10% ~ 40% - green LED
2-3. Empty: less than 2.2V-red LED	2-3. Empty : less then 10% - red LED

3.Battery level transmission when BT Connect (Pairing or Reconnecting)
   3-1. Battery level means key code (Normal, Low, Empty)
4. After RCU booting, after about 40ms after any key release, transmit the battery status (3 step code).
   4-1. However, the [통합전원], [TV 전원], [TV 음량+/-], [외부입력], [Home], [MIC], [GA](BA03) keys are excluded from this operation.
   4-2. Battery information is not transmitted for key release that occurs after entering pairing mode.
   4-3. After the key is released, it is applied up to 10 times based on the battery information transmission.
      (If key input occurs before sending the battery information code, the input key code output is given priority.)
   4-4. If BT is connected 10 times (battery code) before and battery information is transmitted, battery information is not transmitted for the key release that occurs thereafter.
5. Battery voltage should be transmitted in level [%] and follow BAS specification.

(BT12/BA03)	(BT12E/BA03E): Check 'Battary & Charge' sheet
5-1. 1.8 V or less: 0%	5-1. Minimum voltage: 0%
5-2. 3.2V or higher: 100%	5-2. Maximum voltage: 100%

   5-3. The voltage between the above voltages is converted as a percentage.

RCU Battery charging sequence scenario - only BT12E/BA03E

1. Battery charging (Charging cable connection status)
   1-1. less than 80% battery (Low/Empty) : Blinks Red LED (ON: 1000ms, OFF:1000ms)
   1-2. more than 80% battery (Normal) : Blinks Green LED (ON: 1000ms, OFF:1000ms)
2. Full Battery : Keeps the green LED on and transmits the battery charge completion key code (IR/BT).
3. When key is pressed/released
   3-1. When there is a key input, the LED stops charging indication (blinks/on) and operates as a normal scenario and transmits the keycode for that key.

4. Software Specification (5/15)

3-2. 5 seconds after the last key input, the LED is displayed as charging again (LED blinking/on).
4. If there is any operation while charging, the LED blinking according to the operation scenario is prioritized. (Example: When unpairing, LED blinks 5 times (250ms/250ms) If there is no key input after operation, LED blinks/lights after 5 seconds)
5. Charging cable is removed: LED blinking/lighting stops and LED turns OFF
6. When the battery charging cable is connected, the BLE IC becomes H/W reset (same as POR).
After completing H/W reset, it transmits the "Battery Charging" keycode (IR/BT) after 15 seconds (considering the Supervision Timeout time).

RCU Low Battery operation scenario

(Only BT12/BA03)
1. Low Voltage: 2.2V or more ~ less than 2.4V
2. Green LED ON when key code is transmitted at low voltage
3. No change in BT / IR mode

(Only BT12E/BA03E): Check 'Battary & Charge' sheet
1. Low Voltage : 10% ~ 40% under

RCU Empty Battery operation scenario

(Only BT12/BA03)
1.Empty Battery: Less than 2.2V
2. RED LED ON when key code is transmitted during empty voltage
3. BT / IR mode maintenance
4. When the voice search key is input, the empty battery code is output. Do not transmit Mic Start
5. Empty Battery Code output when pairing is attempted. No pairing code sent
6. Define the cut-off(Deep Sleep) entry level [V], and there is no action.
Ex) BT disconnection processing, IR, BT key blocking

(Only BT12E/BA03E): Check 'Battary & Charge' sheet
1. Empty Voltage : Less then 10%

RemoteSolution	Movon	Model
1.870V less than	1.870V less than	BT12/BA03
2.153V less than	2.000V less than	BT12E/BA03E

Voice Transmission operation scenario

	RCU		STB
1)Press voice key	Voice start	→	Reception
	Reception(LED ON)	←	MIC START
	Voice data	→	reception
2)Release voice key	Release Key	→	Reception Release Key
	reception(LED OFF)	←	**MIC STOP**

exception: If the MIC STOP is not received during the transmission of voice data from the RCU, it is automatically terminated after sending the voice for about 10 seconds.
However, if MIC Start is received again within 10 seconds timeout, timeout update
Even when a 10 second timeout occurs, the release key is transmitted according to the actual button release.
MIC STOP transmission when silence (-33dBm) is maintained for more than 2 seconds in STB

* Voice transmission start should be operated by MIC start command sent from STB without input of [MIC] button.
* During voice transmission, all keys except the TV key (TV 전원, 외부입력, TV음량+/-), [이전], and [나가기] keys do not transmit codes when the key is input.
* When the [MIC] key is pressed, the RCU itself changes the slave latency to have the effect of "0" (close latency).
If voice search start command is not received from the STB for 3 seconds after the [MIC] key is pressed, the latency is recovered to the previous state (open latency).

[OK],[FF/B] key operation scenario

This is a function to quickly receive commands (eg, start voice search) delivered through a specific menu of the STB.
- When [OK], [FF/B] key is pressed, the RCU changes the slave latency to "0" (close latency) for 2 seconds.
- After 2 seconds, the latency is restored to the previous state (open latency).

[Btv전원],[TV전원],[통합전원] key operation scenario

This is a function to quickly receive STB Screen On/Off commands.
- When [Btv전원],[TV전원],[통합전원] key is pressed, the RCU changes to have the effect that the slave latency is "0" (close latency) for 2 seconds.
- After 2 seconds, the latency is restored to the previous state (open latency).

Drag Mode

1. When the [문자지움*] key + four-way key is combined, drag works as the four-way key (response to drag operation to use the web browser)
In the process of entering the first drag mode, no break code is transmitted when one key is input while another key is input.
For BT mode / IR mode key code definition, refer to the special key code in the CodeTable sheet.

< Android key value of drag mode >

Key Name	Scancode	Android Keycode
Drag Up	0x136	KEYCODE_ BUTTON_L1
Drag Down	0x137	KEYCODE_ BUTTON_R1
Drag Left	0x138	KEYCODE_ BUTTON_L2
Drag Right	0x139	KEYCODE_ BUTTON_R2

2. When any one key is released after key combination, code transmission stops without sending break code.
3. When drag key combination again, send the corresponding key code (drag mode up / down / left / right)

BLE/IR Mode change operation scenario

This concept is different from IR transmission when unpaired or disconnected.
-Factory Default: BLE mode.
How to switch modes
-BLE mode: [*] + [1] BLE mode when input for 3 seconds. LED 2 times Blink (ON: 250ms, OFF: 250ms)
-IR mode: [*] + [2] IR mode switching when input for 3 seconds. LED 4 times Blink (ON: 250ms, OFF: 250ms)
IR mode operation
-IR transmission when a button is pressed. However, when the [Microphone] button is pressed, the voice is transmitted.

4. Software Specification (6/15)

-BT connection must be maintained and attempted to reconnect (Find Me)
BLE mode operation
-Includes all operation scenarios except IR mode operation.
Maintains mode information during POR / repair.

Find me(Call RCU) operation scenario

Using IAS (Immediate alert level service)
Buzzer Well: See Buzzer Spec

	RemoteSolution	Movon
However, the buzzer does not occur below the cut-off voltage level [V]. (BT12E/BA03E Only)	2.203V(8%) less than	2.000V less than

Backlight: Backlight is on while the buzzer is ringing in normal battery condition
Buzzer sound output time: 1 minute
Abort when inputting any button. (Output when the button is input)
Periodic connection attempt is required in disconnected state. (TBD)
-After BT disconnection due to STB shutdown or link loss, the remote controller attempts to connect every 1.5 seconds.
-At this time, the average standby current consumed should be similar to the BT connection state.
[*] + [4] Buzzer sound confirmation function when input for 3 seconds (test mode)

Factory Default operation scenario

Factory default function by 2 key combination
[*] + [3] Input for 3 seconds
Initializes pairing information, TV setting information, BLE / IR mode information, iSet, IR learning contents, and manual setting of backlight On / Off.
-LED blink is processed in the same way as unpairing.

OTA mode

1. When requesting the battery level (BAS) of the OTA app, the remote control sends the battery level [%] value to the STB.
   -STB executes OTA only when the battery level of the remote control is 40% or higher.
   -STB shows a pop-up window indicating that OTA is impossible for other battery levels.
   -Before upgrade, turn off the back light.
2. When the OTA is upgraded, the GREEN LED turns on.
3. LED operation for OTA result (Judging whether OTA was successful before rebooting after OTA is completed)
   -Success: GREEN LED blinks 3 times at 250ms intervals (ON: 250ms, OFF: 250ms)
   * When the new f / w version and the old f / w version are different after the upgrade is completed
   -Failure: RED LED blinks 3 times at 250ms intervals (ON: 250ms, OFF: 250ms)
   * If the new f / w version and the old f / w version are the same after completing the upgrade
   * BT connection fails after entering OTA mode
   * BT connection is lost when upgrading (Battery removal, STB shutdown)
4. The OTA upgrade image is divided into app code and patch code.
   -App code image file name definition by manufacturer
   * RS: BRM_BA03_Vx.x_YYYYMMDD.bin
   * MOVON: BMM_BA03_Vx.x_YYYYMMDD.bin
   -Define patch code image file name (common to manufacturer)
   * RTL_Bee2_Patch_Vx.x.x.x.bin
5. OTA image creation uses Realtek MP_PackTool.

*** OTA AES256 key define by remote control manufacturer**

RS	MOVON
0x52,0x53,0x5F,0x52,0x44,0x31,0x32,0x46,	0x4D,0x4F,0x56,0x4F,0x4E,0x20,0x53,0x4B,
0x28,0x53,0x4B,0x42,0x5F,0x42,0x52,0x4D,	0x42,0x20,0x52,0x43,0x55,0x20,0x42,0x41,
0x5F,0x42,0x41,0x30,0x33,0x29,0x5F,0x53,	0x30,0x33,0x97,0x0D,0xBE,0xEF,0x0C,0xD3,
0x6D,0x61,0x72,0x74,0x54,0x56,0x5F,0x58	0xD1,0x11,0xF6,0x8E,0x10,0x60,0xFB,0x1A

*** Remote control manufacturer information lo**
Address: 0x000002A00
Data Length: 8-bytes

Manufacturer	OTA Manufacturer Code (ASCII)
RemoteSolution	BRM_BT12 or BRM_BA03
Movon	BMM_BT12 or BMM_BA03

*** Remote control version information location in RCU f/w**
Address: 0x000002908
Date Length: 4-bytes
- It is possible to obtain version information of images loaded from the OTA app.

F/W VERSION

```
Offset(h) 00 01 02 03 04 05 06 07 08 09 0A 0B 0C 0D 0E 0F
00000290  00 00 00 00 00 00 00 00 61 00 00 00 52 43 55 5F  ........a...RCU_
000002A0  42 52 4D 5F 42 41 30 32 00 00 00 00 00 00 00 00  BRM_BA02........
000002B0  00 00 00 00 00 00 00 00 00 00 00 00 00 00 00 00  ................
000002C0  00 00 00 00 00 00 00 00 00 00 00 00 00 00 00 00  ................
000002D0  00 00 00 00 00 00 00 00 00 00 00 00 00 00 00 00  ................
```

```
Offset(h) 00 01 02 03 04 05 06 07 08 09 0A 0B 0C 0D 0E 0F
00000290  00 00 00 00 00 00 00 00 30 00 00 00 00 00 00 00  ........0.......
000002A0  42 4D 4D 5F 42 41 30 32 00 00 00 00 00 00 00 00  BMM_BA02........
000002B0  00 00 00 00 00 00 00 00 00 00 00 00 00 00 00 00  ................
000002C0  00 00 00 00 00 00 00 00 00 00 00 00 00 00 00 00  ................
000002D0  00 00 00 00 00 00 00 00 00 00 00 00 00 00 00 00  ................
```

<RemoteSolution>

Manufacturer Code

<MOVON>

4. Software Specification (7/15)

TV Setup scenario

1. Manual setting

1-1. [스마트TV] + [외부입력] Press simultaneously for 3 seconds-> LED ON
1-2. 3-digit numeric button input (LED OFF when key input, LED ON when key release)
-> When the 3 digits entered are in the IR DB, the power off code of 3-Frame is transmitted, otherwise, the RED (regardless of battery level) LED is ON for 1 second and then the GREEN LED is ON.
-> However, when 0,0,0 is input, it is set as default (Samsung, LG) and at the same time, 3 times of LED Blink (ON: 250ms, OFF: 250ms), then the setting mode ends.
-> 1-2 ~ 1-3 can be repeated
1-3. Enter the [Play/Pause] key to complete the setting. At this time, LED 3 times Blink (ON: 250ms, OFF: 250ms)
-> the RCU transmits "iSet response data" to get the TV code from the STB.
- TV Set type Field: 0x01: Manual(digit or autosearch)

* Keys that can be entered except for numeric keys during manual setting
-> [TV전원] key: Sends a TV power off code 3 frame corresponding to a 3-digit number when input.
-> [채널+/-] key: Switch to Auto search mode (search starts from next / previous of the current setting number)
-> When other keys are input, exit the setting mode with output of the TV synchronization end code.

2. Auto Search (full DB search)

2-1. [스마트TV] + [외부입력] Press simultaneously for 3 seconds-> LED ON
-> TV start code transmission
2-2. Enter the [채널+] or [채널-] button.
-> Power off code transmission of 3-Frame (LED is OFF during code transmission, and remains ON when transmission is completed)
-> [채널+]: Power off code transmission of the next setting number
-> [채널-]: Power off code transmission of previous setting number
-> If the key is continuously input, the next or previous setting number is searched at about 500ms intervals and the power off code is automatically transmitted.
-> Even if the entire IR DB is looped, the search is still possible.
2-3. Enter the [Play/Pause] key to complete the setting. At this time, LED 3 times Blink (ON: 250ms, OFF: 250ms)
-> the RCU transmits "iSet response data" to get the TV code from the STB.
- TV Set type Field: 0x01: Manual(digit or autosearch)

* Searchable keys except [채널+] and [채널-]
-> [TV전원] key: Sends the TV Power off code 3 frame of the set number searched when input.
-> Numeric keys: Switch to manual setting mode
-> When other keys are input, exit the setting mode with output of the TV synchronization end code.

3. Group Search (Brand DB search)

3-1. [스마트TV] + Press one of [1] ~ [9] keys simultaneously for 3 seconds-> LED ON
3-2. Enter the [채널+] or [채널-] button.
-> Power-off code transmission of 3-Frame (LED is turned off during code transmission and keeps ON when transmission is completed)
-> [채널+]: Power off code transmission of the next setting number
-> [채널-]: Power off code transmission of previous setting number
-> If the key is continuously input, the next or previous setting number is searched at about 500ms intervals and the power off code is automatically transmitted.
-> Even if the IR DB of the group is looped, the search is still possible.
3-3. Enter the [Play/Pause] key to complete the setting. At this time, LED 3 times Blink (ON: 250ms, OFF: 250ms)
-> the RCU transmits "iSet response data" to get the TV code from the STB.
- TV Set type Field: 0x01: Manual(digit or autosearch)

* Searchable keys except [CH +] and [CH-]
-> [TV전원] key: Sends the TV Power off code 3 frame of the set number searched when input.
-> When other keys are input, exit the setting mode with output of the TV synchronization end code.

* The power-off code of the 3-Frame that is output when setting may differ depending on the TV. If necessary, the power-off code must be output in more than 3-Frame.
* The waiting time for the setting mode is 15 seconds, and after this time, the setting mode ends with the TV sync code output. At this time, LED is blinked 10 times (ON: 100ms, OFF: 100ms).
-> Keep the previous setting.
* After completing the setting, iSet integration is not possible.

IR code mode changing

1.Mode 1-> Mode 2 switching
1-1. Press [*] + [9] keys simultaneously for 3 seconds
1-2. Completed after 4 LED Blinks (ON: 250ms, OFF: 250ms)

2. Mode 2-> Mode 1 switching
2-1. Press [*] + [9] keys simultaneously for 3 seconds
2-2. Completed after 2 LED Blinks (ON: 250ms, OFF: 250ms)

* IR code assignment after switching IR mode: see CodeTable

Code Read Out

This function reads the 3 digit TV number set on the RCU.

1. Press [스마트TV] + [외부입력] key simultaneously for 3 seconds-> LED ON
2. Enter [전체메뉴][편성표]-> LED OFF for about 1 second
3. The set 3 digit number indicates LED Blink.
-> LED Blink time for each digit (ON: 250ms, OFF: 250ms)
-> LED OFF time between digits: 1 second
-> Digit "0" blinks 10 times

4. Software Specification (8/15)

4. After the 3-digit setting number blinks, the TV sync exit code is transmitted.

* The waiting time for the setting mode is 15 seconds, and after this time, the setting mode is terminated with the TV sync code output. At this time, LED is blinked 10 times (ON: 100ms, OFF: 100ms).
* Any key input is ignored while this function is being executed.

Back Light operating scenario

1. Conditions for initial activation of BackLight (only BT12E, BA03E)
   - After factory default and initialization (*+3 button for 3 seconds or longer), Back Light is disabled
   - BackLight activated when BT pairing is complete.

2. ON condition
   -ON when remote pick-up
   -ON when Find me (buzzer) is running

3. ON time: It remains ON for 2 seconds, and OFF when there is no operation
   -2 seconds extension when picking up before OFF

4. Voltage range:
   4.1 BT12/BA03: more than 2.2V
   4.2 BT12E/BA03E: more than 10%
   - Below the operating level range, pick up or buzzer does not turn ON even if it operates.

* Detailed specifications: see "Backlight" tab

Stuck Key

If any key is pressed for a certain period of time, code transmission is restricted to reduce battery consumption.

1. When any key is pressed for 2 minutes, the code (IR / BT) transmission is stopped.
   -> In case of key combination in drag mode, code is stopped when pressed for 2 minutes.
2. Link operation after entering Stuck Key mode
   -> Back light auto OFF, no reaction when pick up

* Find me should work.

BackLight manual ON/OFF setup

You can manually control the On / Off setting of the backlight.
Press [*] + [5] keys simultaneously for 3 seconds

1.Backlight ON setting (default)
   -> When the backlight setting is Off, it is changed to the On state.
   -> Completed after 2 LED Blinks (ON: 250ms, OFF: 250ms)

2. Set backlight OFF
   -> When the backlight setting is On, it is changed to the Off state.
   -> After 4 LED Blinks (ON: 250ms, OFF: 250ms)

Android Bug Report (BA03/BA03E Only)

Set the Android Bug Report function.
Press the [이전] + [Play/Pause] keys simultaneously for 5 seconds

   -> After 3 seconds of pressing the combination key, the LED will blink once (ON: 250ms, OFF: 250ms).
   -> Bug Report starts after 2 seconds after 1 LED blink.

RCU Version Read Out

This is a function to indicate the RCU F/W Version 2 digits as the number of LED blinks.

1. Press the [스마트TV] + [외부입력] keys simultaneously for 3 seconds -> LED ON
2. [통합전원] input -> LED OFF for about 1 second
3. LED Blink indicates the 2-digit (major.minor) version.
   -> LED Blink time by version (ON: 250ms, OFF: 250ms)
   -> LED OFF time between versions: 1 second
   -> Version "0" blinks 10 times

* Setting mode standby time is 15 seconds, and after this time, setting mode is terminated. At this time, blink the LED 10 times (ON: 100ms, OFF: 100ms).
* Any key input while this function is being executed is ignored.
* Example): When F/W version is 1.2
  -> LED blinks once
  -> LED OFF for 1 second
  -> LED blinks twice

4. Software Specification (9/15)

iSet operation scenario

This function is to set the TV manufacturer code of the remote control automatically by using the EDID information of the TV.

1. Scenario after pairing

1.1 After pairing is completed, STB sends power status information to the remote control.
* STB power OFF state: STB screen off command (0x02)
* STB power ON state: STB screen on command (0x03)

The remote control stores the above information in memory and uses it for power and external input sync between STB and TV when the [Integrated Power] and [Btv Power] buttons are pressed.

1.2 STB sends the iSet Start command (0x01) to the remote control and waits for a response from the remote control (0x0100).
1.2.1 The remote control enables zero slave latency to speed up data reception (zero latency disable after success and failure (timeout))
1.2.2 The remote control has a timeout of 20 seconds after receiving the 0x01 command, in case there is no iSet operation of the STB.
When the timeout ends, the RCU responds with 0x0001.

1.3 After receiving the response (0x0100) of the remote control, STB sends EDID raw data (256 bytes) of the TV to the remote control.
1.3.1 STB is divided into 256 bytes of EDID data to be sent.
1.3.2 After receiving EDID data, the remote controller responds with 0x0100 and restarts the 20-second timer.
1.3.3 Check the received EDID length and if it exceeds 256 bytes, respond with 0x0007, end the 20-second timer, disable zero latency, and terminate the iSet.

1.4 After sending all EDIDs, STB sends the iSet Stop command (0x00) command and ends the iSet task.
1.4.1 The remote control disables the 20-second timer and disables zero slave latency.
1.4.2 Validate some attributes as shown below.
* When the data length is less than 128 or the number of extension blocks is greater than 0 and the length exceeds 256
NG response code: 0x0007-> ISET_ERROR_CODE_INVALID_EDID_LENGTH
* Header information is wrong (first 8 digits of EDID data)
NG response code: 0x0004-> ISET_ERROR_CODE_INVALID_EDID_FORMAT
* When CheckSum is wrong
NG response code: 0x0002-> ISET_ERROR_CODE_CHKSUM_ERROR
* If HDMI OUI is wrong
NG response code: 0x0004-> ISET_ERROR_CODE_INVALID_EDID_FORMAT
* If "iSet command" is not defined(Check i-Set Command table in "RF Protocol" sheet)
NG response code : 0x0003 --> ISET_ERROR_CODE_INVALID_COMMAND

1.5 If the validity check is completed without abnormality, proceed as follows.
1.5.1 When VID is "0"
* Send OK response code (0x0105-> ISET_ERROR_CODE_UNKNOWN_VENDOR).
* Save VID, PID, HDMI port number in NVM and exit iSet.

1.5.2 When VID and PID are searched in EDID TABLE (When the PID of the table is 0xFFFF, only VID is searched.)
EDID TABLE example

```
/*****************************************************************************************
 * Table structure
 *  vid[2], pid[2], set_no[2]                    // ; VID & PID 는 EDID law data 순서로 기재한다.
 *  end mark
 *****************************************************************************************/
const byte IR_TV_EDID_TABLE[] = {
    TV_VID(0x4C2D), TV_PID(0x960B), SET_NUM(341),   // SAMSUNG(SAM) - LFD TV(옥외 전광판/광고용)
    TV_VID(0x4C2D), TV_PID(0xFFFF), SET_NUM(226),   // SAMSUNG(SAM)
    TV_VID(0x1E6D), TV_PID(0xFFFF), SET_NUM(227),   // LG(GSM)
    TV_VID(0x2134), TV_PID(0xFFFF), SET_NUM(9),     // HITACHI(HIT)
    TV_VID(0x20C3), TV_PID(0xFFFF), SET_NUM(66),    // JVC(JVC)
    TV_VID(0x4DD9), TV_PID(0xFFFF), SET_NUM(194),   // SONY(SNY)
    TV_VID(0x34A9), TV_PID(0xFFFF), SET_NUM(95),    // PANASONIC(MEI)
    TV_VID(0x5262), TV_PID(0xFFFF), SET_NUM(21),    // TOSHIBA(TSB)
```

In the table above, if SET_NUM is not in F / W
* Send OK response code (0x0108-> ISET_ERROR_CODE_UNKNOWN_DEVICE).
* Save the VID, PID, and HDMI port numbers in NVM (optional) and exit iSet.

In the table above, if SET_NUM is within F / W
* Send OK response code (0x0100-> ISET_ERROR_NONE).
* VID, PID, and HDMI port numbers are stored in NVM.
* LED 3 times Blink (ON: 100ms, OFF: 100ms) and iSet is finished.

If the VID & PID of the received EDID is already in the RCU
* Send OK response code (0x0106 --> ISET_ERROR_CODE_IDENTICAL_VENDOR)

Note: The code of this setting number is used for power and external input synchronization between STB & TV.

1.5.3 When VID and PID are not searched in EDID TABLE
* Send OK response code (0x0105-> ISET_ERROR_CODE_UNKNOWN_VENDOR).
* Save VID, PID, HDMI port number in NVM and exit iSet.

1.6 The TV field (3-byte) of the response code is described in detail in Section 6 below.

2. Scenario when TV EDID is changed (TV change or HDMI port change)

Even if the previous EDID data (256 bytes) and the currently read EDID data 1 byte are different
Proceed from Section 1.2 of "Post-Pairing Scenario".
However, if the VID and PID are the same and the HDMI port is changed, there is no LED blink.

3. Scenario after BT reconnection

After the BT reconnects, the STB sends STB power status information to the remote control as in section 1.1 above.
* STB power OFF state: STB screen off command (0x02)
* STB power ON state: STB screen on command (0x03)

After that, the STB sends EDID data to the remote control (always with or without change).

4. Scenario according to STB [Integrated Power] button operation (BT connected state)

When the [Integrated Power] button is input while BT is connected, the TV power (toggle, ON, OFF) code is sent according to the current STB power status.
Also, when it turns ON from STB OFF, it sends TV INPUT code 3 times repeatedly to switch HDMI port to STB.
BT disconnected state is output in the order of STB power cord (IR)-> TV power toggle code-> STB version code (IR).

4.1 Enter the [All Power] button
The remote control checks the existence of the "TV power ON and OFF" code (discrete) in the TV manufacturer's setting number set in the EDID table.
Key action specifications
- Key push: iSet Key Noti(BT) -> TV power code(on/off or toggle) transmission
- Key release: STB power cord (BT/IR) transmission -> STB version code (IR) -> iSet Key Noti(BT) -> MACRO (TV INPUT)

4.1.1 When the TV power Discrete code (ON, OFF) is present, send the TV power cord as follows according to the STB power state.
STB power ON status: iSet Key Noti(BT) -> TV power OFF code transmission -> STB power cord (BT/IR) transmission -> STB version code (IR)
STB power OFF status: iSet Key Noti(BT) -> TV power ON code transmission -> STB power cord (BT/IR) transmission -> STB version code (IR) -> iSet Key Noti(BT) -> MACRO (TV INPUT)
* MACRO output order
1. Send TV INPUT code 2 seconds after released [통합전원] Key
2. Send TV INPUT code 3 seconds after above 1
3. Transmit and terminate the TV INPUT code 5 seconds after the above 2

* Macro output is available only when the TV INPUT code is discrete (no output when there is no discrete code)

4. Software Specification (10/15)

* During the TV INPUT code macro output, the LED turns ON.
* If EDID is received during TV INPUT code macro output, macro output is stopped.

4.1.2 Discrete code does not exist
iSet Key Noti(BT) -> TV power toggle code-> STB power cord (IR)-> STB version code (IR).

4.2 STB screen ON / OFF command reception
Save screen status information from STB

* During TV INPUT code transmission, when TV power OFF code is transmitted, TV INPUT code transmission is stopped.
* in BT disconnected : TV power ON code transmission -> STB power cord (BT/IR) transmission -> STB version code (IR)

~~**5. Scenario according to STB [Btv power] button operation**~~
~~If there is HDMI discrete code regardless of BT connection or not, send the TV INPUT code at the [Btv power] button to synchronize the external input.~~

~~5.1 [Btv Power] button input~~
~~STB power cord (BT) transmission -> TV INPUT code transmission and termination after 1 second~~
~~5.2 The remote control transmits the corresponding code when there is an HDMI discrete code of the set TV.~~
~~No TV INPUT code transmission~~

6. i-Set Command Response Code "TV" Field Operation Scenario
This is a function to transmit the currently set TV tuning code to the STB, and the type and setting number set in the TV field (3-byte) are loaded.
6.1 When receiving EDID of TV starting with i-Set Start cmd (0x01)
6.1.1 i-Set TV setup OK: "0x00" in TV Type field and synchronized code allocation by EDID in TV code field
TV Type: 0x00
TV Code: 0x0140 (320)-When the TV setting number set to EDID is 320
6.1.2 i-Set TV setup NG: Allocate the last set type (0x01 or 0x02) and tuned code in the TV Type field
Example 1: User manually tuned 350 times
TV Type: 0x01
TV Code: 0x015E (320)
Example 2: When the user has learned (Manual tuning code is 350)
TV Type: 0x02
TV Code: 0x015E (320)
6.2 For STB request: i-Set Get TV code cmd (0x04)
6.2.1 When the remote control receives the above command (0x04) from the STB, it should send a response code within 5 seconds.
6.2.2 "Result" and "Error Code" fields are assigned as 0x01 and 0x00.
6.2.3 The "TV Type" field is assigned one of 0x00 (ISET), 0x01 (Manual), and 0x02 (IR Learning) according to the method in which the TV is tuned.
6.2.4 The "TV Code" field assigns the currently tuned code.

6. i-Set Sync Disable/Enable Operation Scenario
This function enables/disables power and external input synchronization between STB and TV.
The command can be transmitted to the remote controller in any state of the STB.
6.1 i-Set Sync Disable(0x06)
When "iSet command 0x06" is received, the remote control disables the power and external input synchronization functions.
The deactivation state operates with the same logic as the manual setting of the TV.
- When entering the [통합전원] key, the TV power toggle code is transmitted regardless of the STB screen state.
- When entering the [통합전원] key, Block TV HDMI macro operation.
- In the STB OFF state, the TV HDMI discret code is cut off when the [STB power] key is entered.
- If a new EDID is received in the disable state and updated to the TV tuning code, the synchronization function is activated by the remote control itself (if the TV is changed)

6.2 i-Set Sync Enable(0x07)
When iSet command 0x07 is received, the remote control activates power and external input synchronization.

7. i-Set Key Notification Operation Scenario
When entering a key defined below, the RCU sends an iSet Key notification code (for STB debugging purposes)
7.1 Defining a key
dedicated key: [통합전원], [셋톱전원], [TV전원], [TV 음량+], [TV 음량-], [외부입력]
After switching TV mode (using external input or smart TV key): 4-way key, [확인], [스마트TV], [이전], [나가기]
7.2 Key code packet: Check "i-Set Key Notification" table in "RF Protocol" sheet.
* Payload

Device Type(1-byte)	Physical Key(1-byte)	Function (1-byte)	IR State(1-byte)

7.3 Key code transmission conditions(only BT connected)
It is transmitted only in the BT connected state, and is not transmitted in the BT disconnected state.
When a key is input, the i-Set key notification code is transmitted first (once), and then the assigned code is transmitted.
(EX: [통합전원] -> Right Picture)

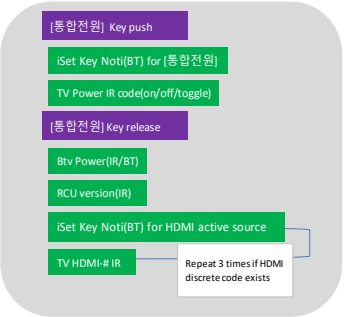

8. Other
8.1 If TV manufacturer code is set manually after iSet setup
* iSet function disable: Operates regardless of STB power status.

8.2 When VID & PID are connected to another TV, iSet setting and STB interlocking operation should be performed.
8.3 If the STB Screen On/Off command is not received for 5 seconds after sending the [Btv 전원] code, the TV power transmits a toggle code when [통합전원] is input.
- That is, even if there is a TV on/off discret code, the TV power is transmitted to the toggle because the STB power state is unknown.
- When the "Screen on/off" command is not sent: When the upgrade pop-up is exposed when entering Google Install Wizard or STB sleep mode.

4. Software Specification (11/15)

Smart TV control operation scenario

1. How to switch smart TV control mode

1.1 When the [스마트TV] button is input, the following key code is transmitted and switched at the same time
- Smart home (IR) of the synchronized (manual, automatic, learning) TV
- Smart TV control mode (IR/BT)
- Btv Break code (BT) - BT unconnected status (IR) is not transmitted

* Pairing proceeds in unpaired state (no smart TV mode conversion).
* If the 'smart home' IR code of the TV does not exist, the 'smart TV control' mode will not be switched.

1.2 Controllable Buttons
- Includes TV-only button(s) as well as [이전] and [나가기] buttons.
  * 12 buttons: [TV전원], [외부입력], [TV음량+/-], 4-way, [Play/Pause], [스마트TV], [이전], [나가기]
  * The upper button always maintains TV mode in TV control mode.

Note: When the external input button is input, the 5-second timer does not run (because it is already in TV mode).
* It should be IR learning.

2. How to switch Btv control mode

2.1 [Home] button input
- Exit (IR) of the tuned TV
- Btv control mode (IR/BT)
- Btv Break/Release code (IR/BT)
- Btv Home (IR/BT)
- Btv Break/Release code (IR/BT) - BT unconnected status (IR) is not transmitted
- After 300ms, the HDMI discrete code (IR) of the tuned TV is transmitted 3 times - It is transmitted only when there is a discrete code in the state of BT connection and iSet synchronization. HDMI discrete code (IR) transmission interval is 1 second

* If the [Home] button is input after changing to the Btv control mode, the 'Btv Home' key code is transmitted. (No macro transmission)

2.2 Special purpose button input
- Apply button: NUGU, GA (BA03/BA03E), schedule, ZEM kids, shortcut
- Transition method: same logic as Btv home button (instead of sending home button, sending the corresponding Btv keycode)

2.3 Btv dedicated button repeat input
- Applied buttons: Btv dedicated buttons (numbers (0~9), *, #, favorite channels, channels +/-, REW (Red), FF (Blue), Btv volume +/-, mute)
- How to switch
  . When the target button is repeatedly inputted 3 times within 60 seconds, it switches to Btv mode
  (same macro as the Btv home button. However, the corresponding key code is transmitted instead of the home key)
  . Only the corresponding key code is transmitted normally until you enter it twice within 60 seconds.
  . Input the smart TV control mode target button (see Section 1.2) within 60 seconds, or reset the count 3 times when the last input exceeds 60 seconds

2.4 Enter number + [Play/Pause] button
- Apply button: number button (0~9)
- How to switch
  . When the [Play/Pause] button is input after inputting the number buttons (0~9), it switches to Btv mode
  (same macro as the Btv home button with the [Play/Pause] button key code)
  . It operates when the [Play/Pause] button is input after entering the number button once, or when the [Play/Pause] button is input after entering the number button twice.
  (In case of input 3 times, it is changed to Btv mode by operation of section 2.3)

2.5 In case of switching to other Btv control mode
- When H/W reset occurs, Btv mode is default.
- When [통합전원] is input
- In case of TV synchronization (manual, automatic)
- Factory reset (including unpairing)

3. Notification while using TV mode

3.1 Transmission of key code (IR/BT) indicating 'TV control mode'
- Apply button: 4-way button, [Play/Pause], [이전], [나가기]
- Transmission method: When the button is pressed and released, it is transmitted (repeated when the corresponding key is pressed 5 times)
- Count is cleared because it is converted to Btv control mode during factory reset.

4. LED Color Operation Scenario

4.1 Btv Control Mode: Green
Green is lit even when the TV dedicated button is input

4.2 Smart TV control mode: Blue -> Only the button that transmits the TV code turns blue
Green turns on when Btv dedicated button is input

4.3 When the battery voltage is empty level, Red LED is always lit regardless of the control mode.

4. Software Specification (12/15)

<Only BA03, BA03E>

Android TV Voice (Google Voice)

Type	Short-form	UUID	Properties
Service	ATVV_SERVICE_UUID	AB5E0001-5A21-4F05-BC7D-AF01F617B664	
Write Characteristic	ATVV_CHAR_TX	AB5E0002-5A21-4F05-BC7D-AF01F617B664	Write
Read Characteristic	ATVV_CHAR_RX	AB5E0003-5A21-4F05-BC7D-AF01F617B664	Notify
Control Characteristic	ATVV_CHAR_CTL	AB5E0004-5A21-4F05-BC7D-AF01F617B664	Notify

*** VOICE_DATA - ATVV_CHAR_RX**

NUM	Field	Description	Values	Size	Direction
1	Opcode	Notification	0x1B	1byte	RCU -> STB
2	Att Handle	Handle	0x0000 ~ 0xFFFF	2byte	
3	Att Value	Seq #	0x0000 ~ 0xFFFF	2byte	
4		Id	0x00 ~ 0xFF	1byte	
5		Prev pred	0x0000 ~ 0xFFFF	2byte	
6		Index	0x00 ~ 0xFF	1byte	
7		ADPCM Data	0x00 ~ 0xFF	128byte	

Header	ADPCM data
6 bytes	128 bytes

Seq #	Id	Prev. pred	index
2 bytes	1 byte	2 bytes	1 byte

Header type	
Seq #	Sequence number of audio frame. Monotonically increasing until rollover.
Id	Remote control id. Will expand on this. [TODO]
Prev pred	Previous predicted ADPCM value
Index	Index into step size table

*** AUDIO_STOP - ATVV_CHAR_CTL**

NUM	Field	Description	Values	Size	Direction
1	Opcode	Notification	0x1B	1byte	RCU -> STB
2	Att Handle	Handle	0x0000 ~ 0xFFFF	2byte	
3	Att Value	Command	0x00	1byte	

*** AUDIO_START - ATVV_CHAR_CTL**

NUM	Field	Description	Values	Size	Direction
1	Opcode	Notification	0x1B	1byte	RCU -> STB
2	Att Handle	Handle	0x0000 ~ 0xFFFF	2byte	
3	Att Value	Command	0x04	1byte	

*** DPAD_SELECT - ATVV_CHAR_CTL**

NUM	Field	Description	Values	Size	Direction
1	Opcode	Notification	0x1B	1byte	RCU -> STB
2	Att Handle	Handle	0x0000 ~ 0xFFFF	2byte	
3	Att Value	Command	0x07	1byte	

*** START_SEARCH - ATVV_CHAR_CTL**

NUM	Field	Description	Values	Size	Direction
1	Opcode	Notification	0x1B	1byte	RCU -> STB
2	Att Handle	Handle	0x0000 ~ 0xFFFF	2byte	
3	Att Value	Command	0x08	1byte	

*** AUDIO_SYNC - ATVV_CHAR_CTL : Not Implemented**

NUM	Field	Description	Values	Size	Direction
1	Opcode	Notification	0x1B	1byte	RCU -> STB
2	Att Handle	Handle	0x0000 ~ 0xFFFF	2byte	
3	Att Value	Command	0x0A	1byte	
4		frame_num	0x0001 : exact frame number.	2byte	

4. Software Specification (13/15)

* GET_CAPS_RESP - ATVV_CHAR_CTL

NUM	Field	Description	Values	Size	Direction
1	Opcode	Notification	0x1B	1byte	RCU -> STB
2	Att Handle	Handle	0x0000 ~ 0xFFFF	2byte	
3	Att Value	Command	0x0B	1byte	
4		version	0x0004 : (ver0.4)	2byte	
5		codecs_supported	0x0001 [0000_0001B]: ADPCM, 8khz/16bit (default) 0x0003 [0000_0011B]: ADPCM (8khz/16bit & 16khz/16bit) {future} 0x0005 [0000_0101B]: Opus and ADPCM 8khz/16bit 0x0007 [0000_0111B]: Opus and ADPCM (8khz/16bit & 16khz/16bit)	2byte	
6		bytes/frame	0x0086 (134 bytes, default) {future} DLE-dependent	2byte	
7		bytes/characteristic	0x0014 (20 bytes, default) {future} DLE-dependent	2byte	

* MIC_OPEN_ERROR - ATVV_CHAR_CTL

NUM	Field	Description	Values	Size	Direction
1	Opcode	Notification	0x1B	1byte	RCU -> STB
2	Att Handle	Handle	0x0000 ~ 0xFFFF	2byte	
3	Att Value	Command	0x0C	1byte	
4		error_code	0x0F01 : invalid codec 0x0F02 : Remote timed out waiting for Mic_open() 0x0F03 : Invalid State; already streaming audio	2byte	

* ATV_GET_CAPS - ATVV_CHAR_TX

NUM	Field	Description	Values	Size	Direction
1	Opcode	Write Request	0x12	1byte	STB -> RCU
2	Att Handle	Handle	0x0000 ~ 0xFFFF	2byte	
3	Att Value	Command	0x0A	1byte	
4		version	0x0005 : (ver0.5)	2byte	
5		codecs_supported	0x0001 [0000_0001B]: ADPCM, 8khz/16bit (default) 0x0003 [0000_0011B]: ADPCM (8khz/16bit & 16khz/16bit) {future} 0x0005 [0000_0101B]: Opus and ADPCM 8khz/16bit 0x0007 [0000_0111B]: Opus and ADPCM (8khz/16bit & 16khz/16bit)	2byte	

* ATV_MIC_OPEN - ATVV_CHAR_TX

NUM	Field	Description	Values	Size	Direction
1	Opcode	Write Request	0x12	1byte	STB -> RCU
2	Att Handle	Handle	0x0000 ~ 0xFFFF	2byte	
3	Att Value	Command	0x0C	1byte	
4		codec_used	0x0001 [0000_0001B]: ADPCM, 8khz/16bit (default) 0x0002 [0000_0010B]: ADPCM 16khz/16bit {future} 0x0004 [0000_0100B]: Opus	2byte	

* ATV_MIC_CLOSE - ATVV_CHAR_TX

NUM	Field	Description	Values	Size	Direction
1	Opcode	Write Request	0x12	1byte	STB -> RCU
2	Att Handle	Handle	0x0000 ~ 0xFFFF	2byte	
3	Att Value	Command	0x0D	1byte	

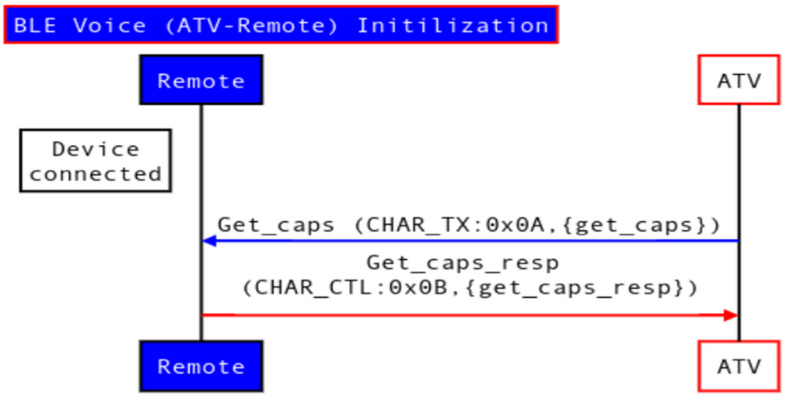

4. Software Specification (14/15)

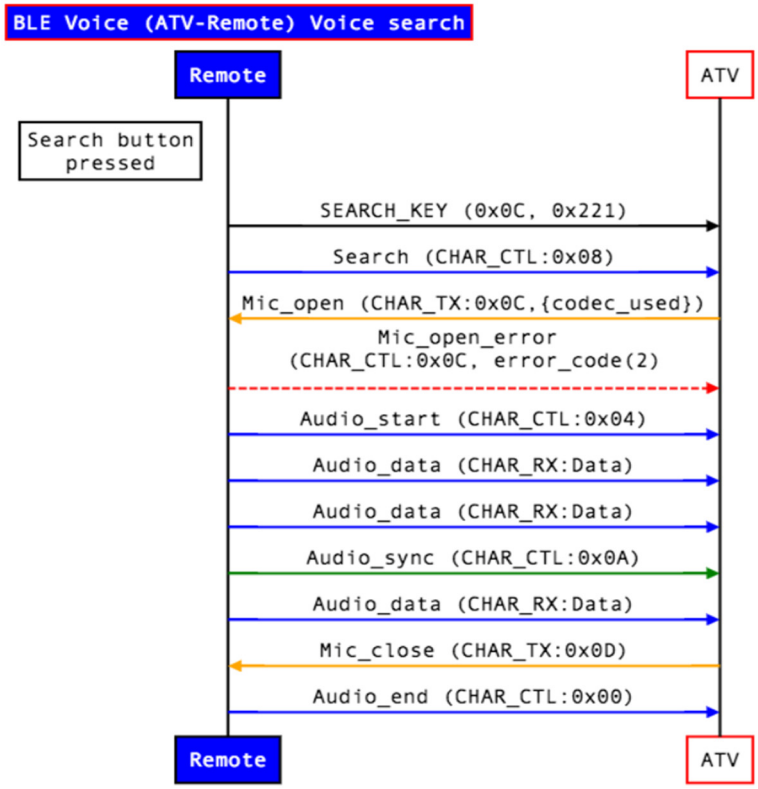

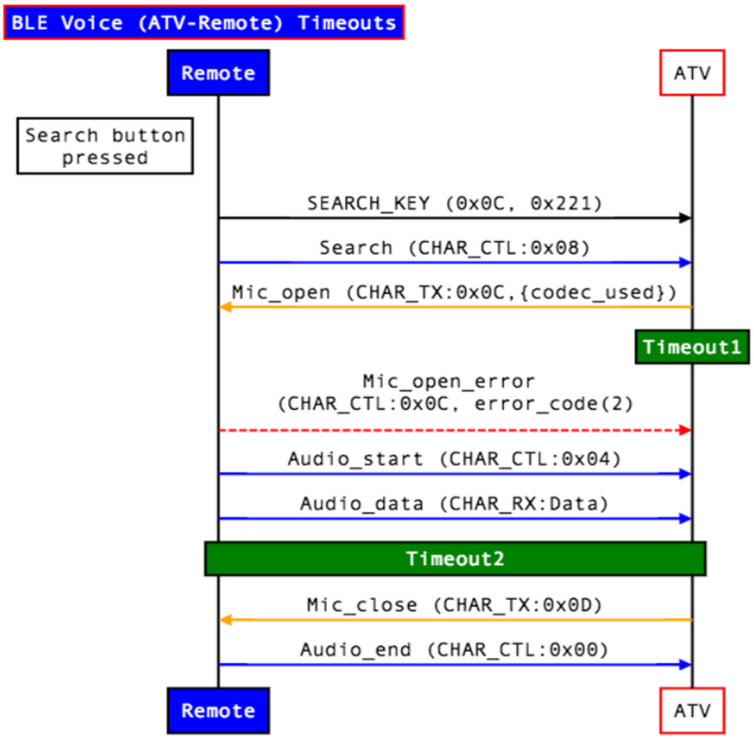

4. Software Specification (15/15)

TV key learn function

User Action

[TV power]+[Play/Pause] for 3sec

detailed description:
When entering the learning mode normally, the green LED on the top stays ON
If there is no input after entering the learning mode, after 1 minute, the learned key is saved, the green LED blinks 3 times, and the learning mode is automatically terminated.
(If any key is pressed in the step of learning mode below, 1 minute is counted again)

RCU Internal Operation

When you press the TV key (TV power, TV volume +/-, source) to be learned, the green LED on the top lights once.

detailed description:
If you press a key other than the corresponding TV key to be learned on the remote control, red LED blinks 5 times and waits for learning mode
Press the TV key to be learned on the remote control and if there is no IR input for 15 seconds, Blink the red LED 3 times and wait for learning mode.

After facing the remote control to learn (TV remote control), press the key of the remote control to study (within 0.5 to 3.0 cm).

When learning is normal, the green LED flashes 3 times

detailed description:
If learning is not normal, Red LED blinks 3 times and waits for learning mode.
If learning does not work normally, you need to re-learn by pressing the corresponding key to learn again on the remote control.

If you press the [Play/Pause] key for 1s, the learning is saved and the green LED flashes 3 times and ends.

completed

*** However, when low battery , flashing of green LED is replaced with red**

Learnable keys: [TV전원], [TV음량+/-], [외부입력], [UP], [DOWN], [LEFT], [RIGHT], [Play/Pause], [스마트TV], [이전], [나가기]

* In the case of [Play/Pause] key, there is a button for learning and a function to end learning. If it is input for more than 1.5 seconds, the learning mode is terminated at any time.

-> the RCU transmits "iSet response data" to get the TV code from the STB.

- TV Set type Field: 0x02: IR Learning

5. Part List

5.1 Mechanical List

No.	Part Name	Spec	Q'ty	Maker	비고
1	TOP CASE	ABS HF-0680, K21383(BLACK), SILK1	1	일상전자	
2	BOTTOM COVER	ABS HF-0680, K21383(BLACK)	1	일상전자	
3	BATTERY COVER	ABS HF-0680, K21383(BLACK)	1	일상전자	
4	IR WINDOW	PC SC-1220R, 40697 B(D/RED)	1	일상전자	
5	CH VOL KNOB	ABS HF-0680, K21383(BLACK), SILK1	1	일상전자	
6	INDICATOR LED	PC LD7800, W1020J(MIKY) / TP-1020, LDW542(MILKY)	1	일상전자	
7	SIDE KEY MUTE	ABS HF-0680, K21383(BLACK), SILK1	1	일상전자	
8	SIDE KEY VOLUME	ABS HF-0680, K21383(BLACK), SILK1	1	일상전자	
9	RUBBER KEYPAD	SILICONE, COLOR2(CLEAR, YELLOW), SILK5, SPRAY2, LASER, SF COATING	1	RS HK TAESUNG	
10	METAL DOME SHEET	Φ5DR, 110G, 35KEY	1	제이앤텍	
11	(+)SPRING	SUS 304 NI-CO Φ0.6	1	대성하이텍	
12	(-)SPRING	SUS 304 NI-CO Φ0.6	1	대성하이텍	
13	COMMON SPRING	SUS 304 NI-CO Φ0.6	1	신광스프링	
14	MESH	MESH, RC56,0.05T	1	엠에스 전자부품	
15	PE BAG	80X265X0.08T, RECYCLE MARK	1	건아테크	
16	CARTON BOX	553*415*282 (80EA/1Box)	0.0125	대흥포장	
17	BACK LABEL	BOPP,30X42,SILK2	1	탑인쇄	
18	MANUAL	SMILAR PAPER,292X158	1	아침인쇄	
19	LABEL	ART PAPER, 16X4	1	탑인쇄	
20	PASS LABEL	ART PAPER,15X30,SILK2	1	탑인쇄	
21	TAPE	TAPE, RB50	1	제이앤텍	
22	Alkaline Battery	ALKALINE BATTERY, 1.5V LR6, AA	2	HUATAI BEXEL ROCKET DURACELL	
23	Mini Manual	ART-Removale 46X60mm, Silk2	1	용인프린팅	

REMOTE SOLUTION CO., LTD.

INSTITUTION : 2021.05.24	SPECIFICATION	MODEL NO :	25
REFORM :			
DECISION : 2024.08.13	(TRANSMITTER REMOCON)	RD12F00	69

5.2 Electronical Part List

No	Components Name	Components Spec	Manufacturer	Quantity	Reference
1	Antenna Chip	ACA3216A1CCS	Inpaq	1	ANT1
2	Buzzer SMD	BM9027S HR-9027BT3S2 KDM-09D-3V BMY-2703	FHD Bosan HS Tech	1	BZ1
3	Electrolytic Capacitor SMD	47UF,16V,±20%,5053	Samhwa Samyoung	1	CE1
4	Ceramic Capacitor Chip	1.2PF,NP0,±0.25PF,1005	MURATA	2	C5,C6
5	Ceramic Capacitor Chip	22PF,C0G,±5%,1005	TDK	1	C2
6	Ceramic Capacitor Chip	100PF,C0G,±5%,1005	Samsung	1	C28
7	Ceramic Capacitor Chip	150PF,X7R,±10%,1005	YAGEO	1	C27
8	Ceramic Capacitor Chip	10NF,X5R,±10%,1005	Taiyo-uden	1	C34
9	Ceramic Capacitor Chip	100NF,10V,X7R,±10%,1005	WALSIN	9	C7,C8,C9,C10,C21,C23,C25,C30,C31
10	Ceramic Capacitor Chip	1UF,X5R,±10%,1005	Darfon	6	C1,C17,C19,C20,C22,C24
11	Ceramic Capacitor Chip	2.2UF,X5R,±10%,1005	samhwa	1	C18
12	Ceramic Capacitor Chip	10UF,6.3V,X5R,±20%,1005	ABCO	10	C11,C12,C13,C14,C26,C29,C32,C33,C35,C36
13	Resistor Chip	0 OHM,1/16W,±5%,1005	YAGEO	3	R1,L1,R4
14	Resistor Chip	2 OHM,1/16W,±5%,1005	TYCO	1	FB1
15	Resistor Chip	2 OHM,1/10W,±5%,1608	Cosmetech	1	R52
16	Resistor Chip	2.7 OHM,1/10W,±5%,1608	Samsung	1	R17
17	Resistor Chip	180 OHM,1/16W,±5%,1005	ROHM	1	R30
18	Resistor Chip	270 OHM,1/16W,±5%,1005	TA-I	5	R41,R46,R47,R48,R49
19	Resistor Chip	300 OHM,1/16W,±5%,1005	WALSIN	1	R9
20	Resistor Chip	330 OHM,1/16W,±5%,1005	PILKCOR	5	R31,R33,R34,R42,R43
21	Resistor Chip	470 OHM,1/16W,±5%,1005	Fenghua	6	R20,R21,R22,R23,R50,R53
22	Resistor Chip	560 OHM,1/16W,±1%,1005	AVX	7	R27,R28,R29,R36,R37,R38,R39
23	Resistor Chip	1K OHM,1/16W,±5%,1005	Murata	1	R16
24	Resistor Chip	2.7K OHM,1/16W,±5%,1005	TDK	1	R56
25	Resistor Chip	4.7K OHM,1/16W,±5%,1005	Taiyouden	3	R2,R3,R5
26	Resistor Chip	10K OHM,1/16W,±5%,1005	Darfon	3	R8,R10,R12
27	Resistor Chip	18K OHM,1/16W,±1%,1005	Eyang	1	R7
28	Resistor Chip	33K OHM,1/16W,±5%,1005	KEMET	1	R19
29	Resistor Chip	47K OHM,1/16W,±5%,1005	Kyocera	2	R11,R15
30	Resistor Chip	82K OHM,1/16W,±5%,1005	Murata	1	R13
31	Resistor Chip	100K OHM,1/16W,±5%,1005	TDK	6	R18,R24,R25,R26,R51,R54
32	Resistor Chip	820K OHM,1/16W,±5%,1005	Sunlord	1	R14
33	Inductor Chip	3.3NH,±0.3NH,1005	INPAQ	1	L2
34	Inductor Chip	3.9NH,±0.3NH,1005	KEXIN	1	C3
35	Power Inductor Chip	PCLS2012-2R2M(2.2UH,1A)	LRC	1	L3
36	Power Inductor Chip	10UH,±10%,2012	PANJIT	1	L4
37	FET N-CH	2KK5009(SOT23) L2N7002SLT1G(SOT23) 2N7002K(SOT23) PJA3430(SOT-23) MMBT7002K(SOT23)	KEC	4	Q7,Q8,Q9,Q10
38	NPN Transistor Chip	FTC8050H(SOT23) MMBTSD123(SOT23) STD123S(SOT23) KST8050(SOT23) SS8050(SOT23)	IMS Semtech Diodes Onsemi	6	Q1,Q2,Q3,Q4,Q5,Q6
39	Switching Diode Chip	1N4148WS(SOD323)	Fairchild	1	D1
40	Schottky Diode Chip	1KK2104(SOD123) MBR0540W-HAF(SOD123FL) MBR0540T1-D(SOD123) MBR0540(SOD123)	UTC Vishay First silicon	1	D2
41	IR LED SMD	I BIR-HMC33M-TRC-SIDE(30DEG) IR26-61C-L510-R-2G (30DEG)	Bright LED Everight	1	IR1
42	RGB LED Chip	YLS191RGB2206A-C (1616)	Hong-Li	1	LED1
43	White LED	BL-HZ336G-L8-TRB(WHITE,T4-4J,1608) 27-21/T1D-KPQHY/3C (1608,WHITE)	Inhere GMA	18	LED2,LED3,LED4,LED5,LED6,LED8,LED9,LED11,LED12, LED13,LED14,LED16,LED17,LED18,LED21,LED22,LED23,LED24
44	Analog Microphone SMD	ZTS6151 AOS3729A-R38-NTM	Zilltek Sanico	1	MIC1
45	Tact Switch SMD	PTS099160(1.6N,R/A) SKRTLAE010(1.6N,R/A)	Foxeco ALPS	4	KB15,KB22,KB28,KB34
46	Photo Transistor Chip	PT12-21B-TR8(SMD,R/A) BPT-HPG33A-TRB	Bright LED Everight	1	PT1
47	Bluetooth IC	RTL8762CKF(QFN48)	Realtek	1	U1
48	Accelerometer IC	LIS2DH12TR(LGA-12) LIS2DE12TR(LGA-12)	STM	1	U2
49	Boost Converter IC	SYV7070 TPS61097A-33DBVR IM8132S	SILERGY TI IMS	1	U3
50	Crystal SMD	40MHZ,±10PPM,9PF,2016 40MHZ,7R40000002_S1,2016	TXC H&S	1	X1
51	PCB	RD12E,F(FR-4, 4L,1.2T,OSP,CARBON)	GE SSSG JSL PENG YU	1	

6. Schematics

6.1 Bluetooth smart PART

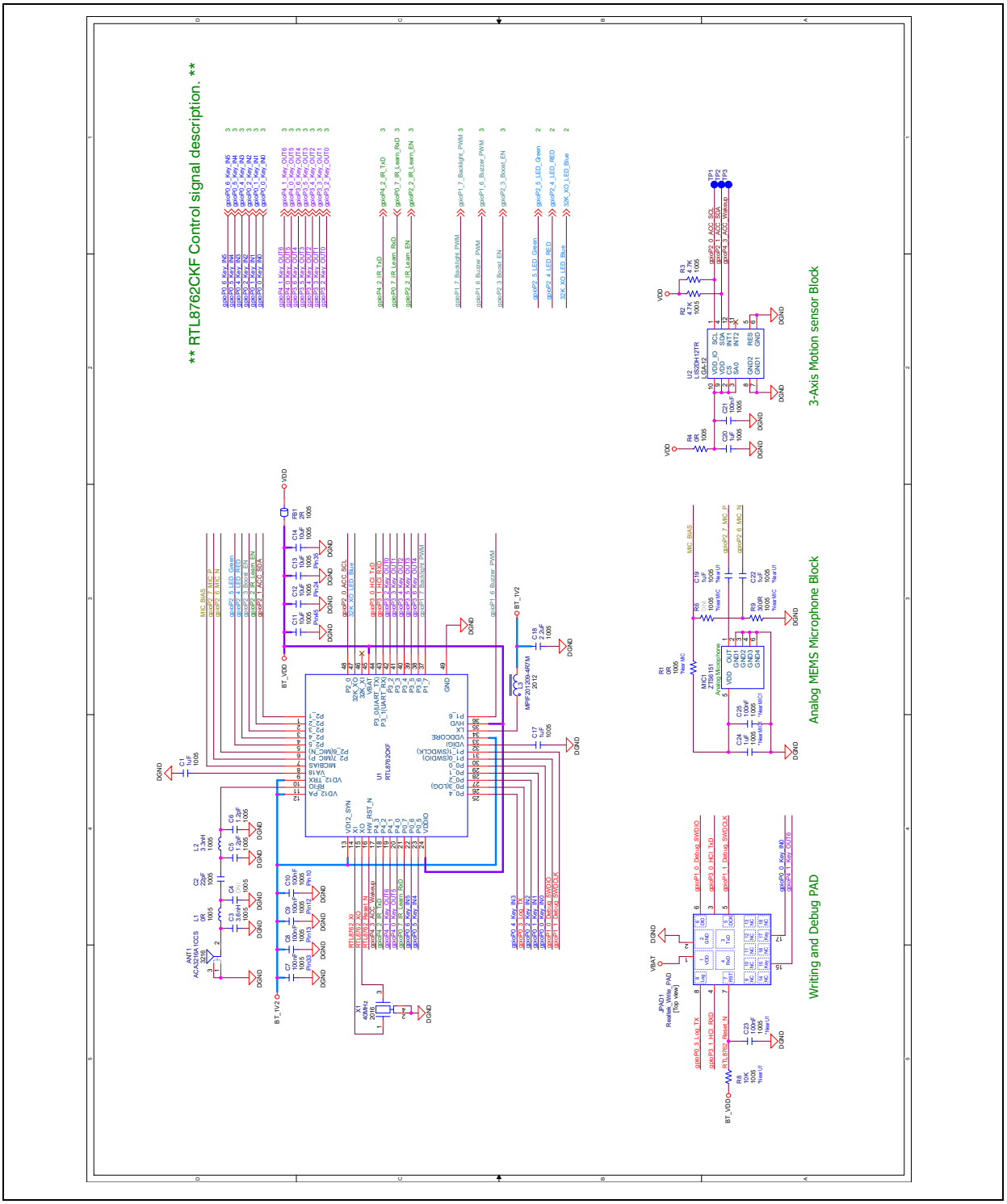

6.2 Keys / IR Learning / IR TxD / Buzzer PART

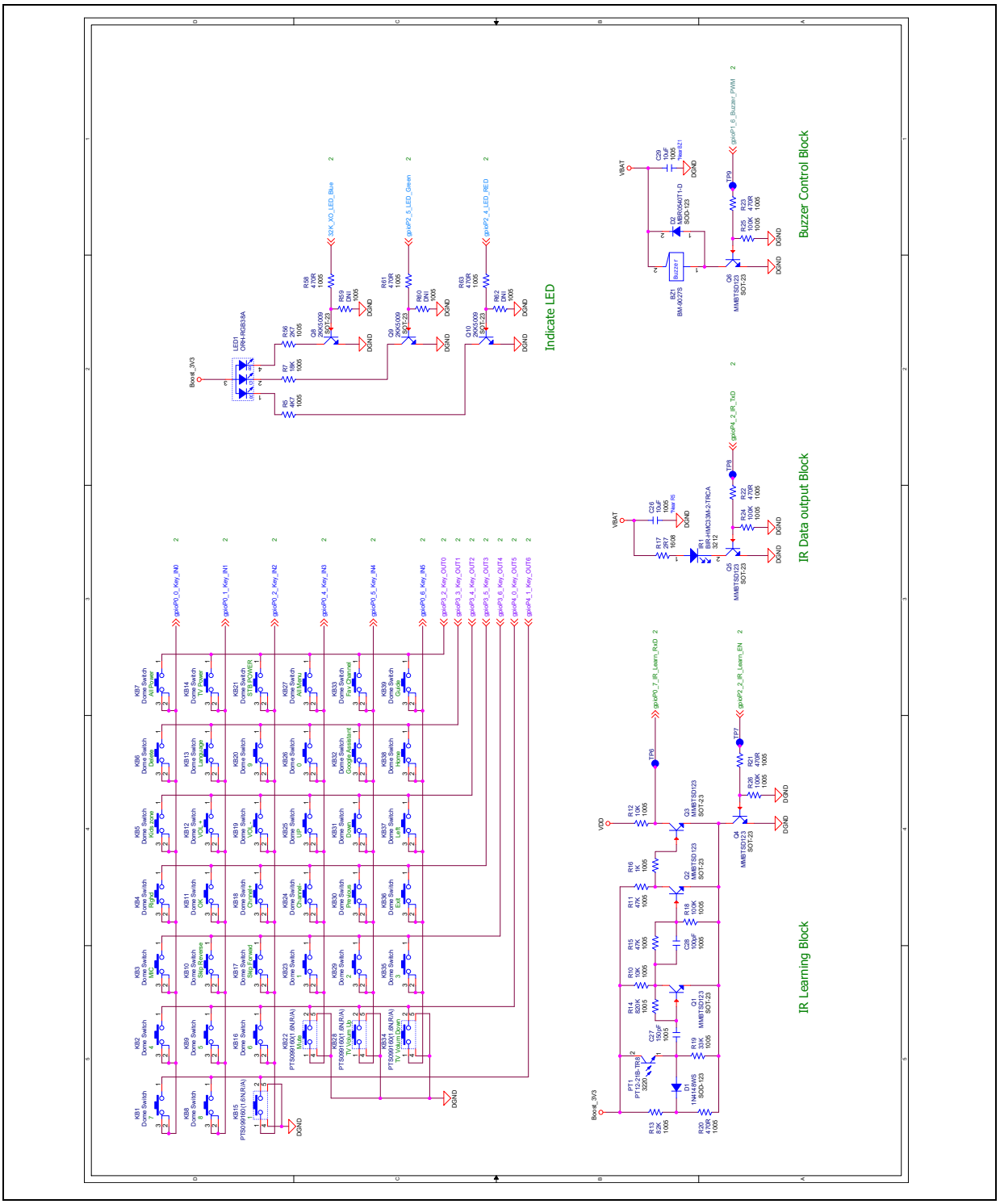

6.3 Backlight / Battery Terminal Part

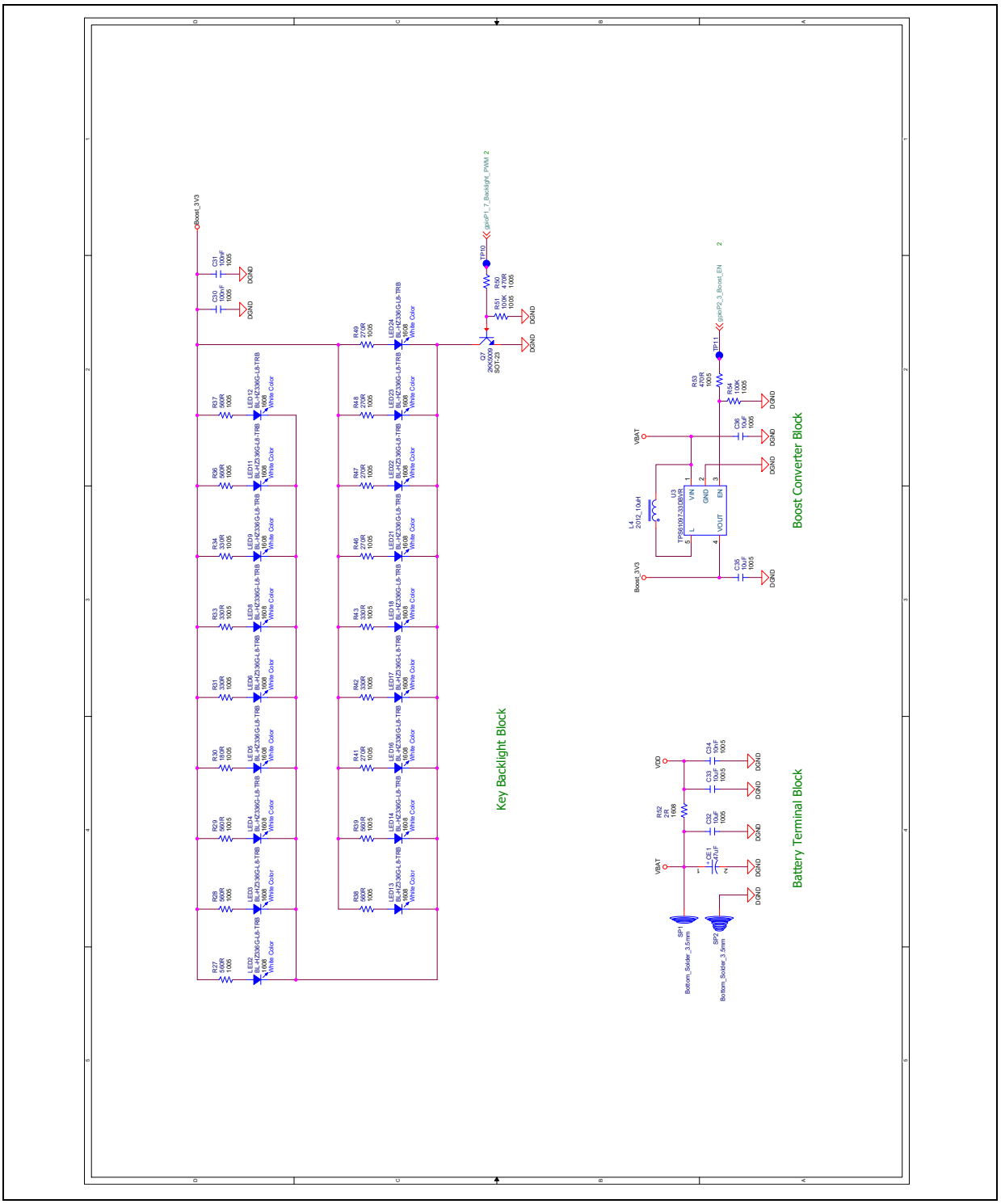

7. PCB Diagram

7.1 TOP PCB (1/3)

7-1-1 PATTEN	7-1-2 Silk
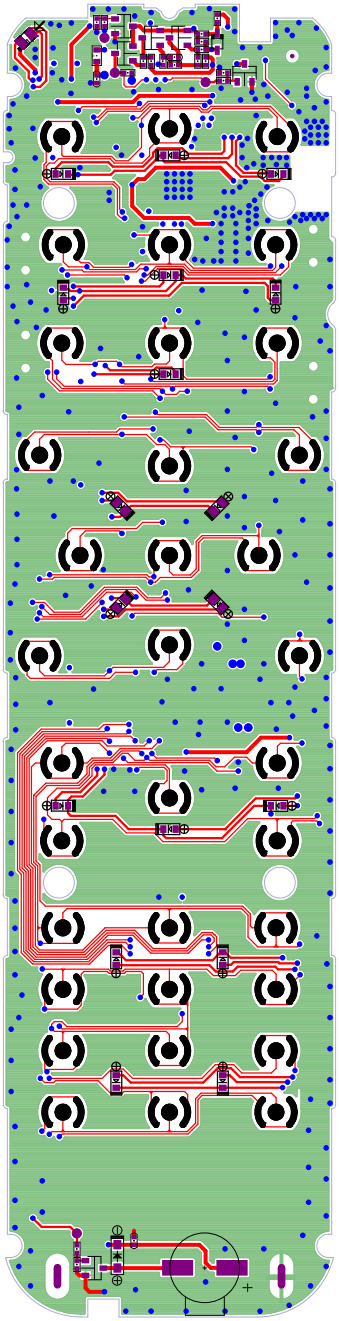	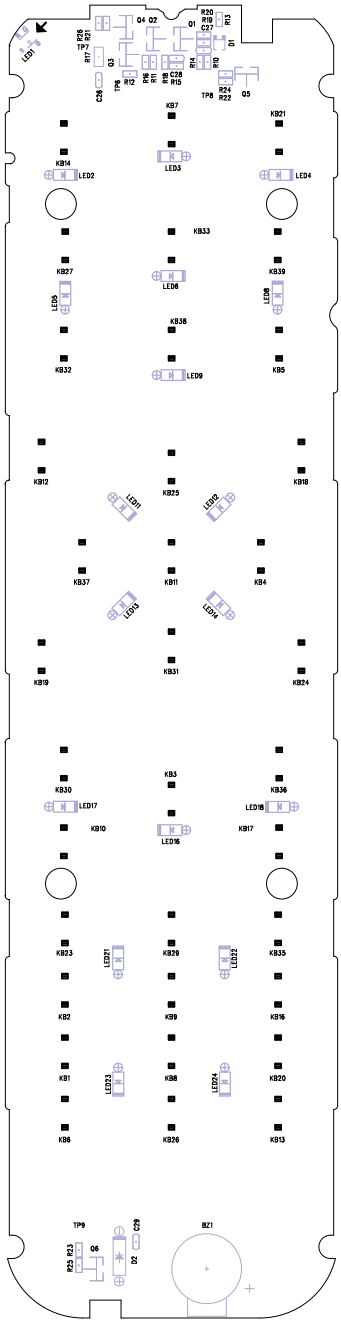

7.2 BOTTOM PCB (2/3)

7-1-3 PATTEN	7-1-4 Silk
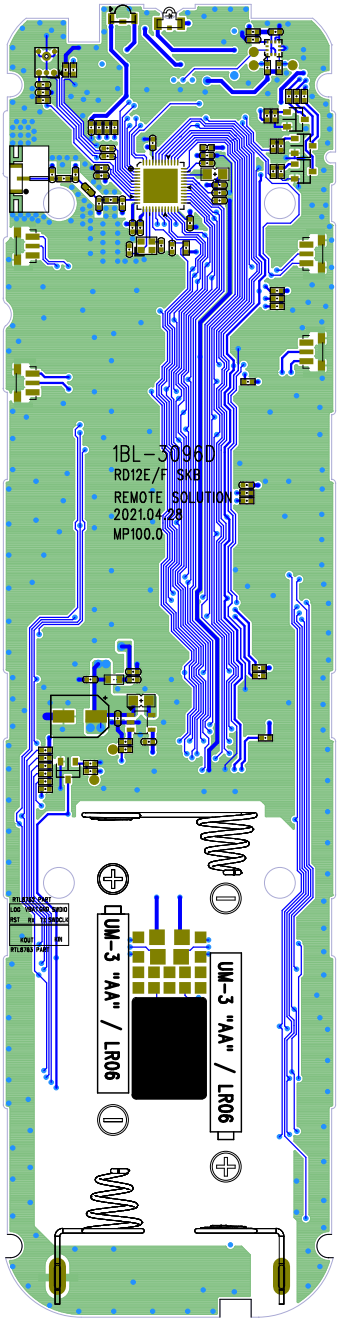	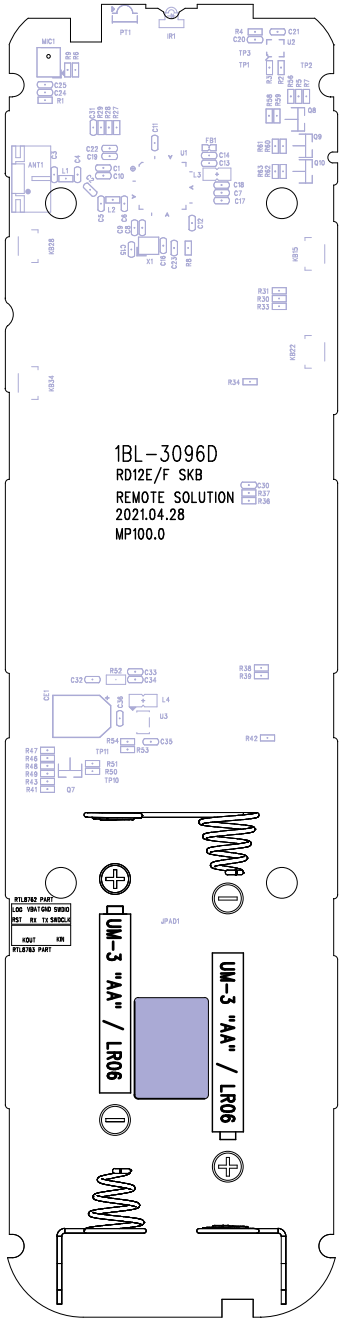

7.3 MAIN PCB (3/3)

7-1-5 Drill Chart	7-1-6 Main PCB 사양

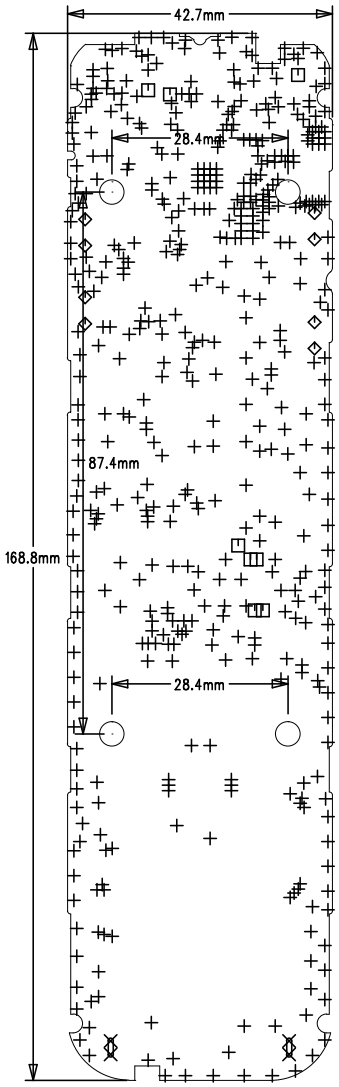

SIZE	QTY	SYM	PLATED	TOL
0.3	513	+	YES	+/-0.0
0.8 x 3	2	×	YES	+/-0.0
0.5	8	□	YES	+/-0.0
0.8	8	◇	NO	+/-0.0

1) PCB Material : FR4, 4-Layer
2) PCB Thickness : 1.2T
3) Copper Foil Thickness :
 - Out Layer 0.5 OZ
 - Inner Layer 1 OZ

4) PCB Size
 Single - 42.7_mm x 168.8mm
 Array – 132.6_mm x _188.85_mm (5 In 1)
5) SilkScreen Color : White
6) PSR Ink Color : Green
7) Surface : OSP
8) Dome Key : Carbon
9) PCB Version : 1BL-3096D

8. PCB Outline Specification – Main PCB

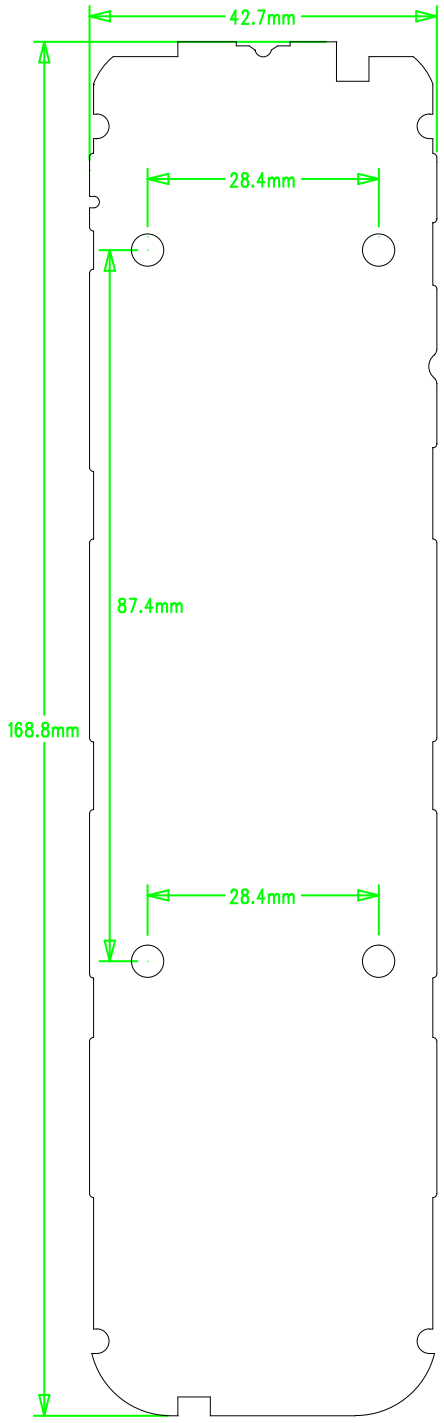

9. Design & Mechanical Specification

9. Design (1/6) – Mold

DESIGN SPECIFICATION Model : RD12F00

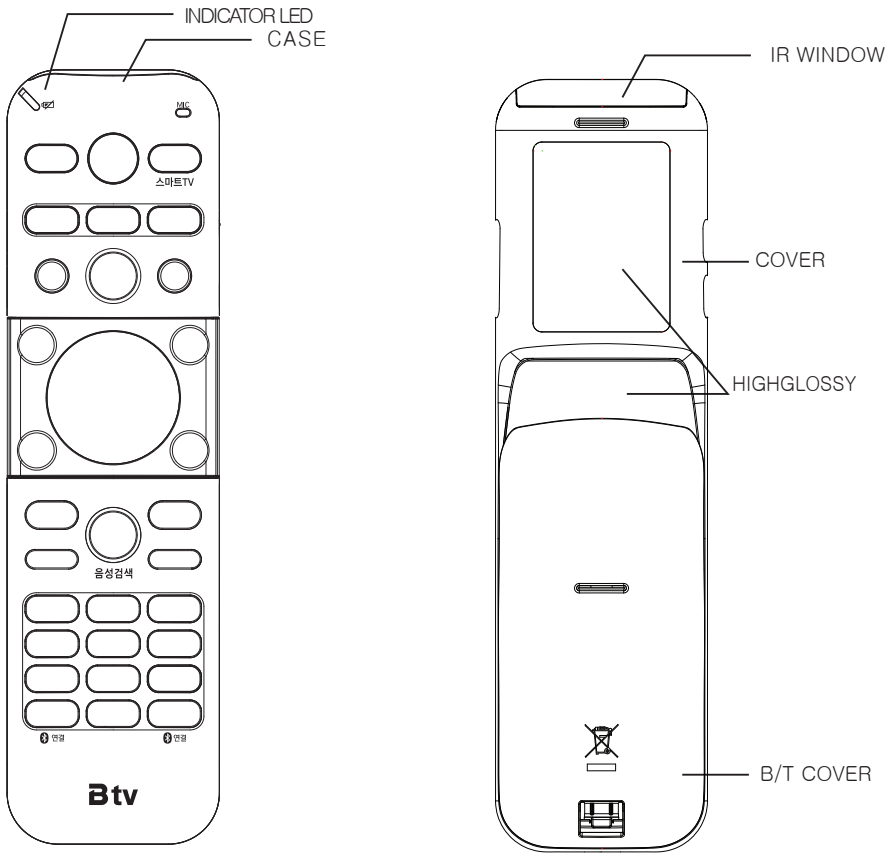

1.MOLD

1.1 MOLD COLOR
* CASE,B/T COVER : ABS, HF-0680, K21383(Black), TEXTURE
* COVER : ABS, HF-0680, K21383(Black), TEXTURE & HIGH GROSSY
* IR WINDOW : PC, SC-1220R, 40697B(D/Red), HIGH GROSSY

1.2 SILK COLOR
* COOLGREY 3C

9. Design (2/6) – KNOB

DESIGN SPECIFICATION Model : RD12F00

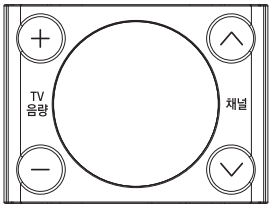

CH/VOL KNOB

SIDE KNOB

2.KNOB

2.1 MOLD COLOR
* ABS, HF-0680, K21383(Black), TEXTURE

2.2 SILK COLOR
* COOLGREY 3C

9. Design (3/6) – RUBBER

DESIGN SPECIFICATION Model : RD12F00

3.1.1

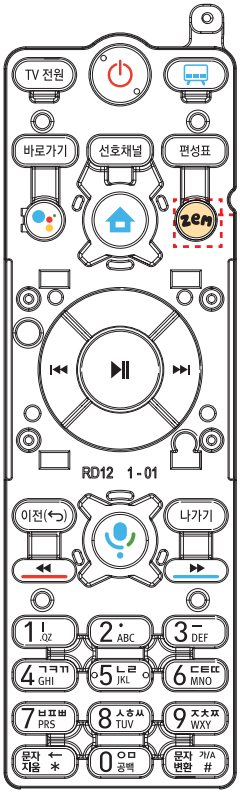

ALL BACK LIGHTING

P/T 7619C(RED)

P/T 7724C(GREEN)

P/T 123C(YELLOW)

P/T 660C(BLUE)

BLACK

COOLGREY 3C

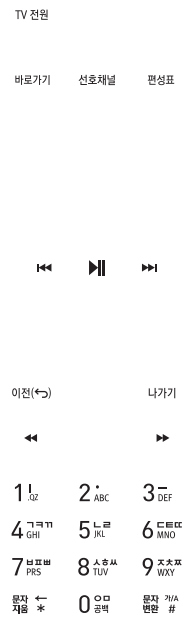

3.RUBBER

3.1 RUBBER COLOR
- 3.1.1 P/T 1205C
- 3.1.2 OTHER TRANSLUCENCE WHITE

3.2 SPRAY & SILK COLOR
- COOLGREY 3C SPRAY
- SILK-7619C,7724C,123C,660C,BLACK
- BLACK SPRAY
- LASER ETCHING
- SOFT COATING

9. Design (4/6) – LABEL

DESIGN SPECIFICATION Model : RD12F00

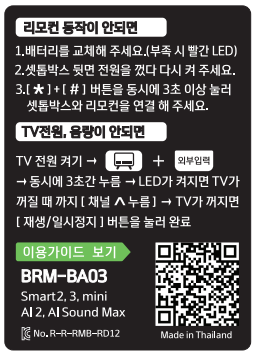

SCALE 150%

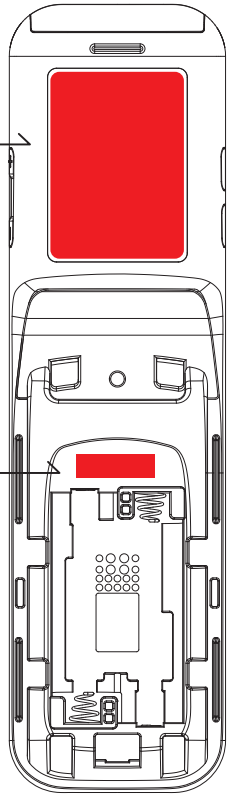

VX.X YYYY.MM.DD

Version No. (Changeable)

Date of Manufacture (Changeable)

※ 소프트팀에 반드시 Ver. 확인 할 것!

4.BACK LABEL	5.VERSION LABEL
4.1 Material : White Bopp 4.2 Size : 30 X 42mm (±0.1mm) 4.3 Silk Color : Black, P/T 360C, P/T 422C 4.4 Coating : Matte Laminating	5.1 Material : Art Paper 5.2 Size : 16 X 4mm (±0.1mm) 5.3 Silk Color : Black

9. Design (5/6) – MANUAL

DESIGN SPECIFICATION Model : RD12F00

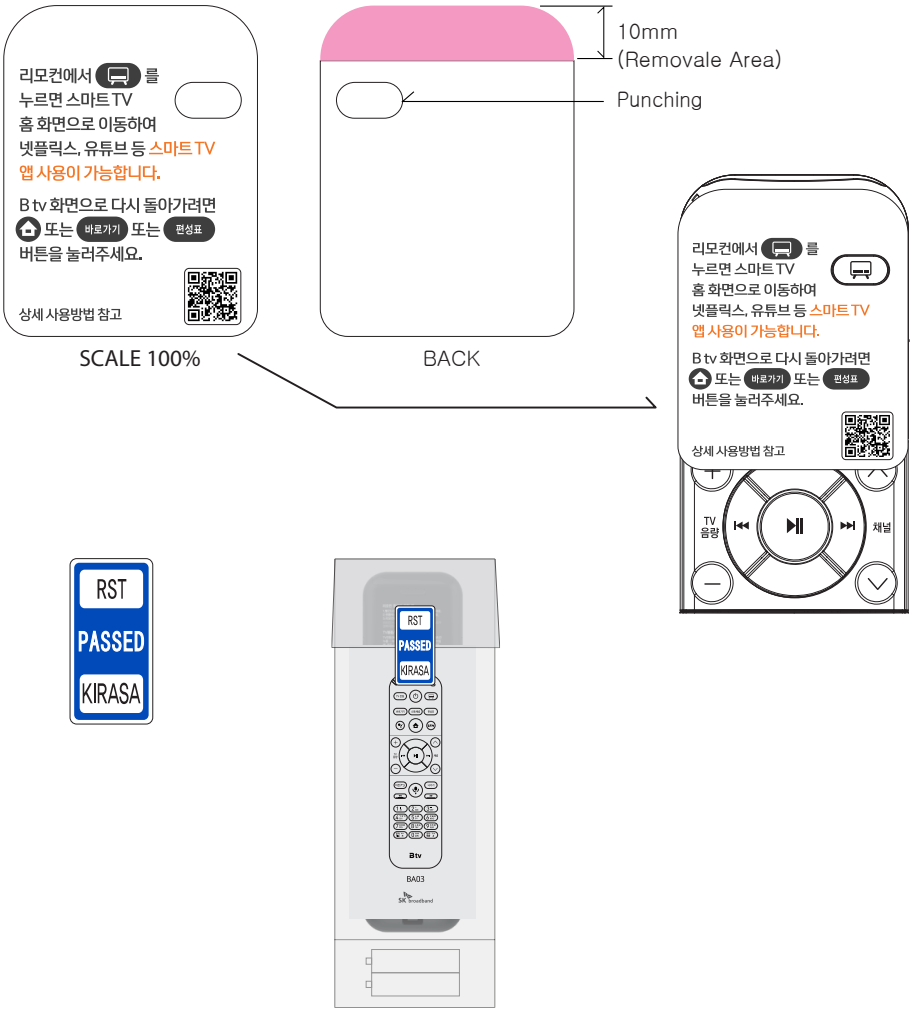

6.MINI MANUAL	7.PASSED LABEL
6.1 Material : Art removable 80g 6.2 Size : 46 X 60mm (±0.1mm) 6.3 Color : D/Gray(K90), Orange(M66, Y97) 6.4 Punching 1EA	7.1 Material : Art Paper 7.2 Size : 30 X 15mm (±0.1mm) 7.3 Silk Color : Text-Black, P/T 2728C Background – White

9. Design (6/6) – MANUAL

DESIGN SPECIFICATION Model : RD12F00

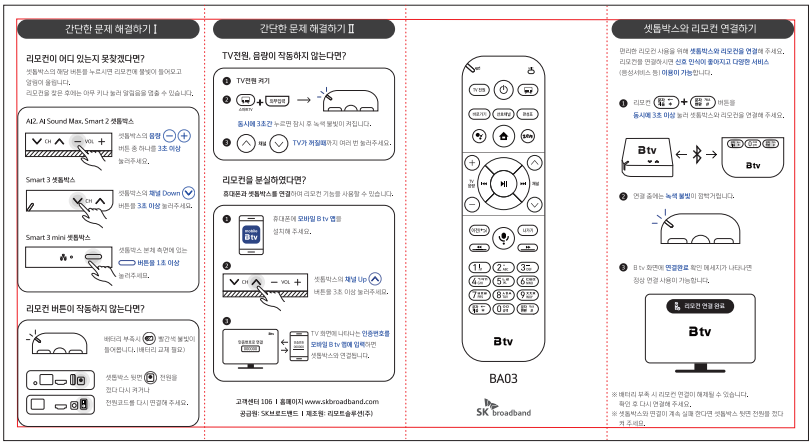

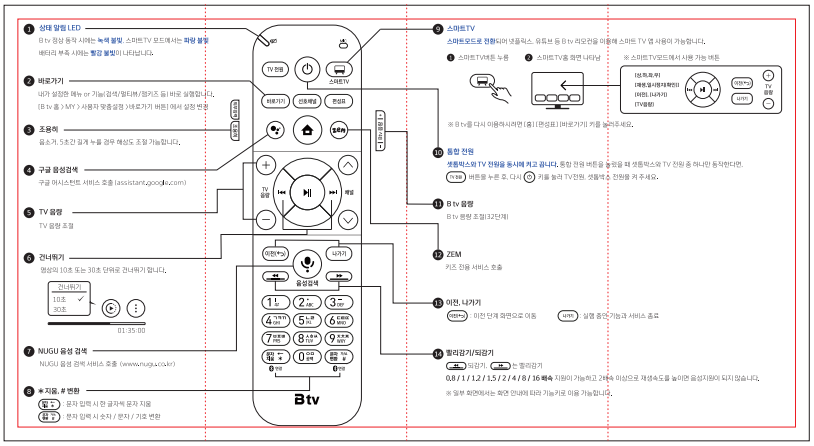

8.MANUAL

8.1 Material : 80 Vellum Paper
8.2 Size : 292mm(+0/−2mm) X 158mm(±0.2mm)
8.3 Silk Color : Offset 4 Color
8.4 Fording : 대문접지

10. Mechanical Spec (1/15) – TOP CASE

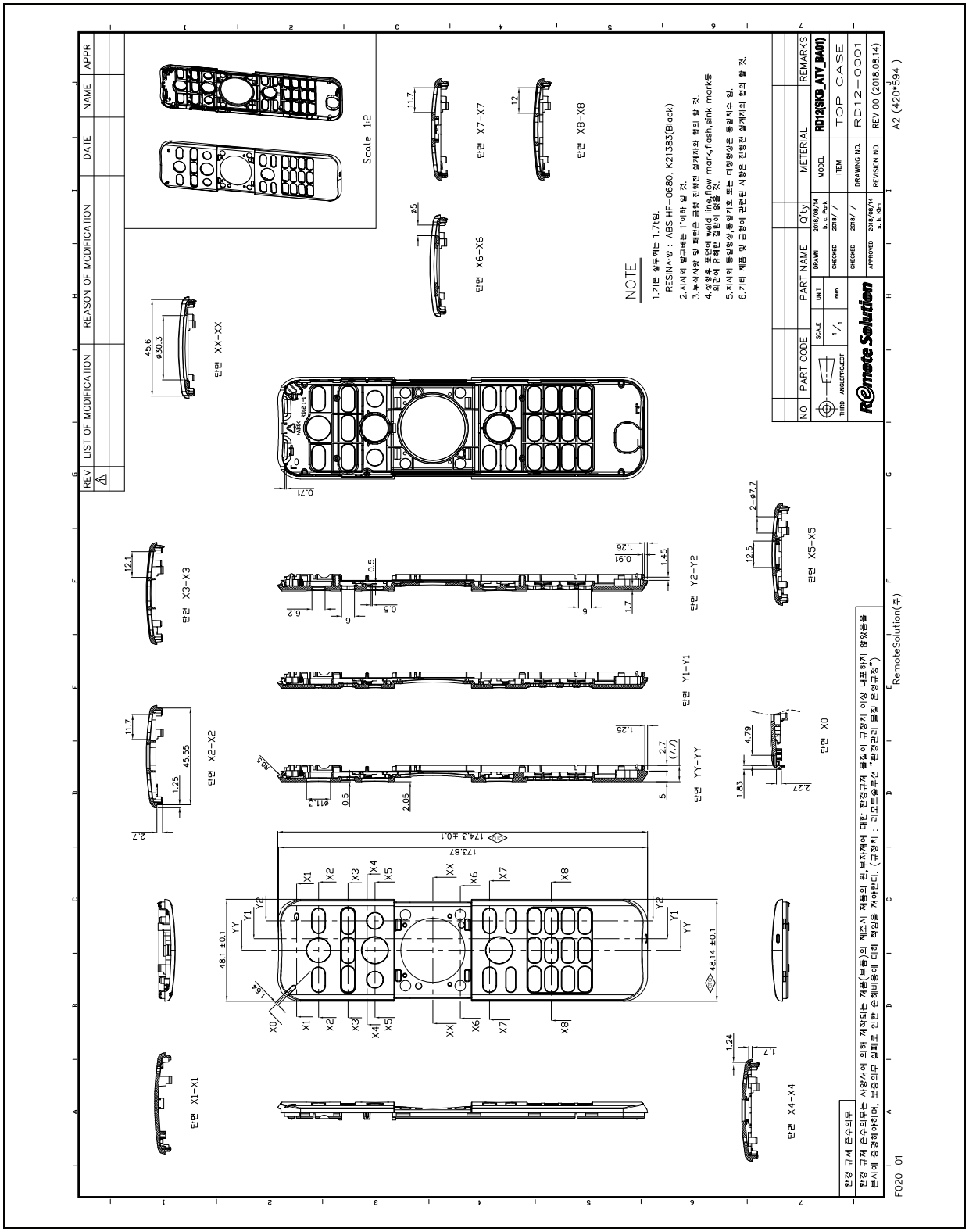

10. Mechanical Spec (2/15) – BOTTOM COVER

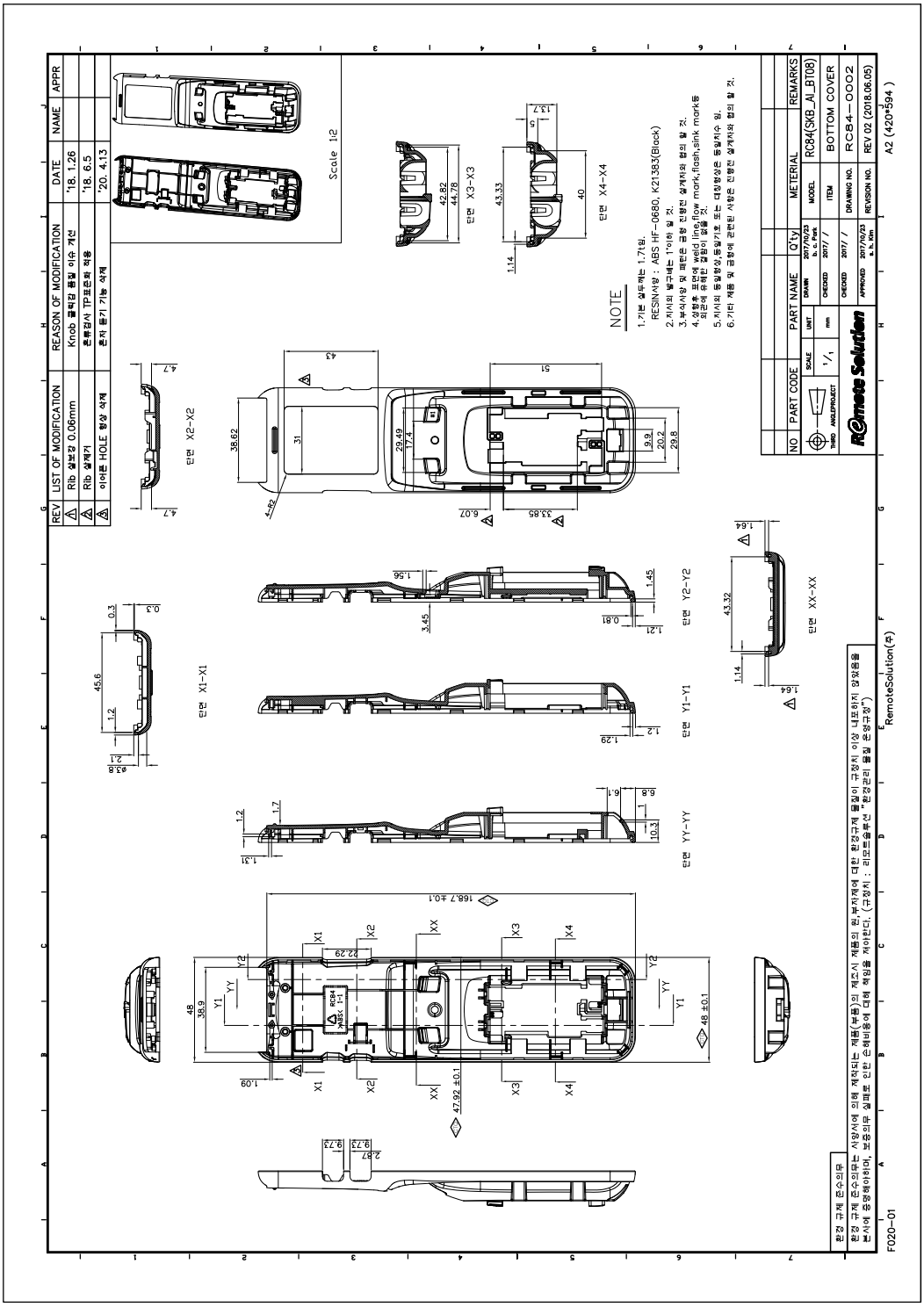

10. Mechanical Spec (3/15) – BATTERY COVER

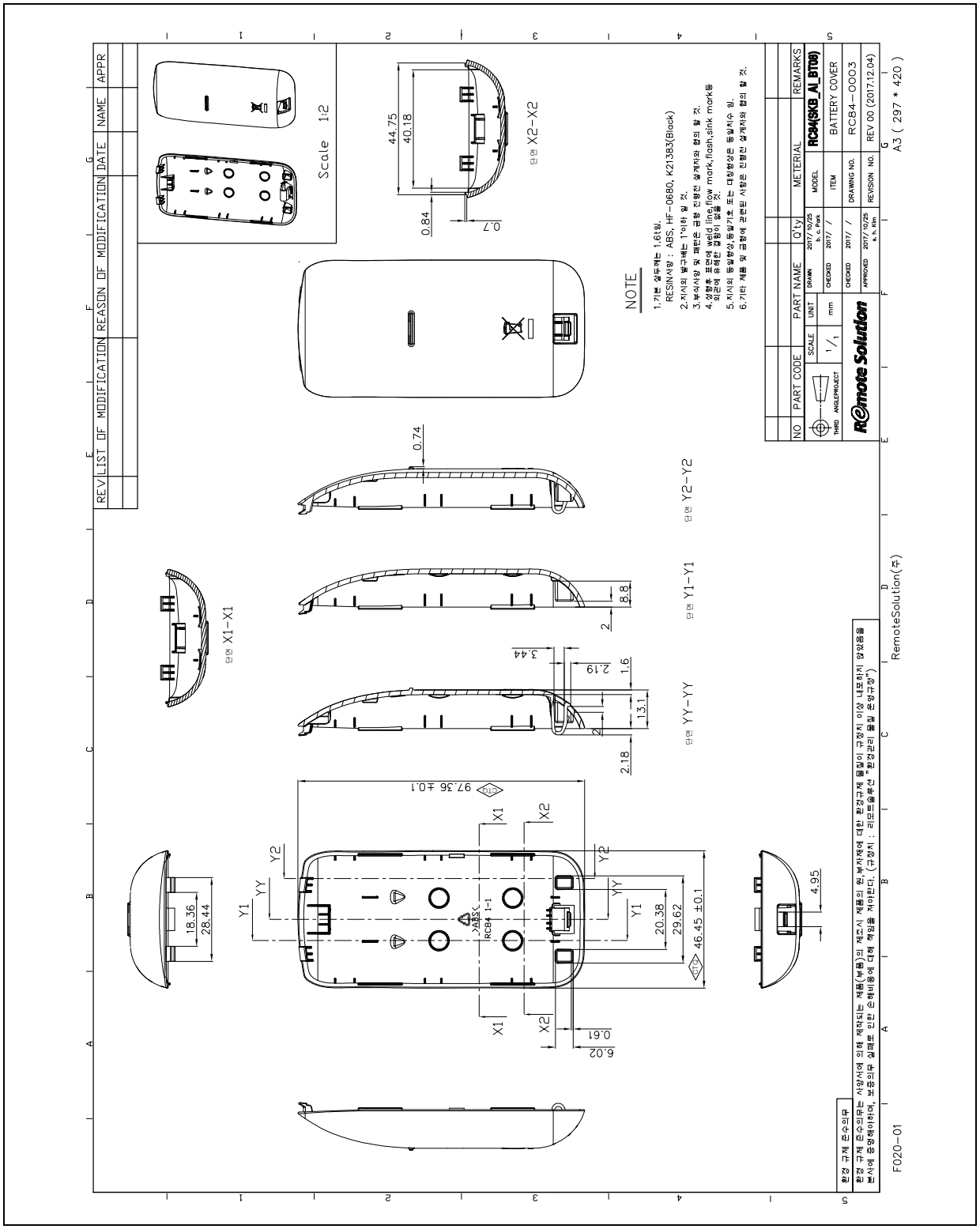

10. Mechanical Spec (4/15) – IR WINDOW

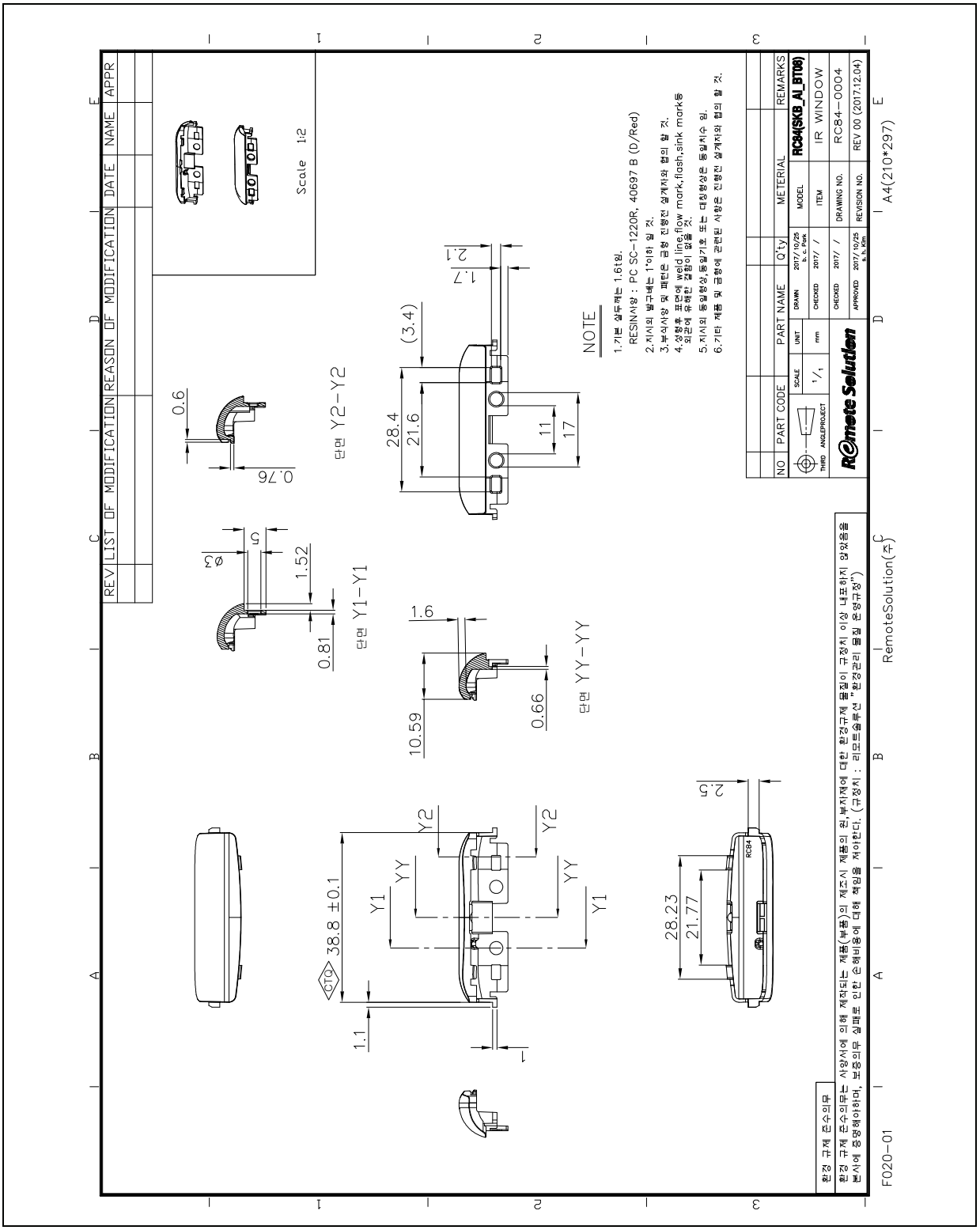

10. Mechanical Spec (5/15) – CH , VOL KNOB

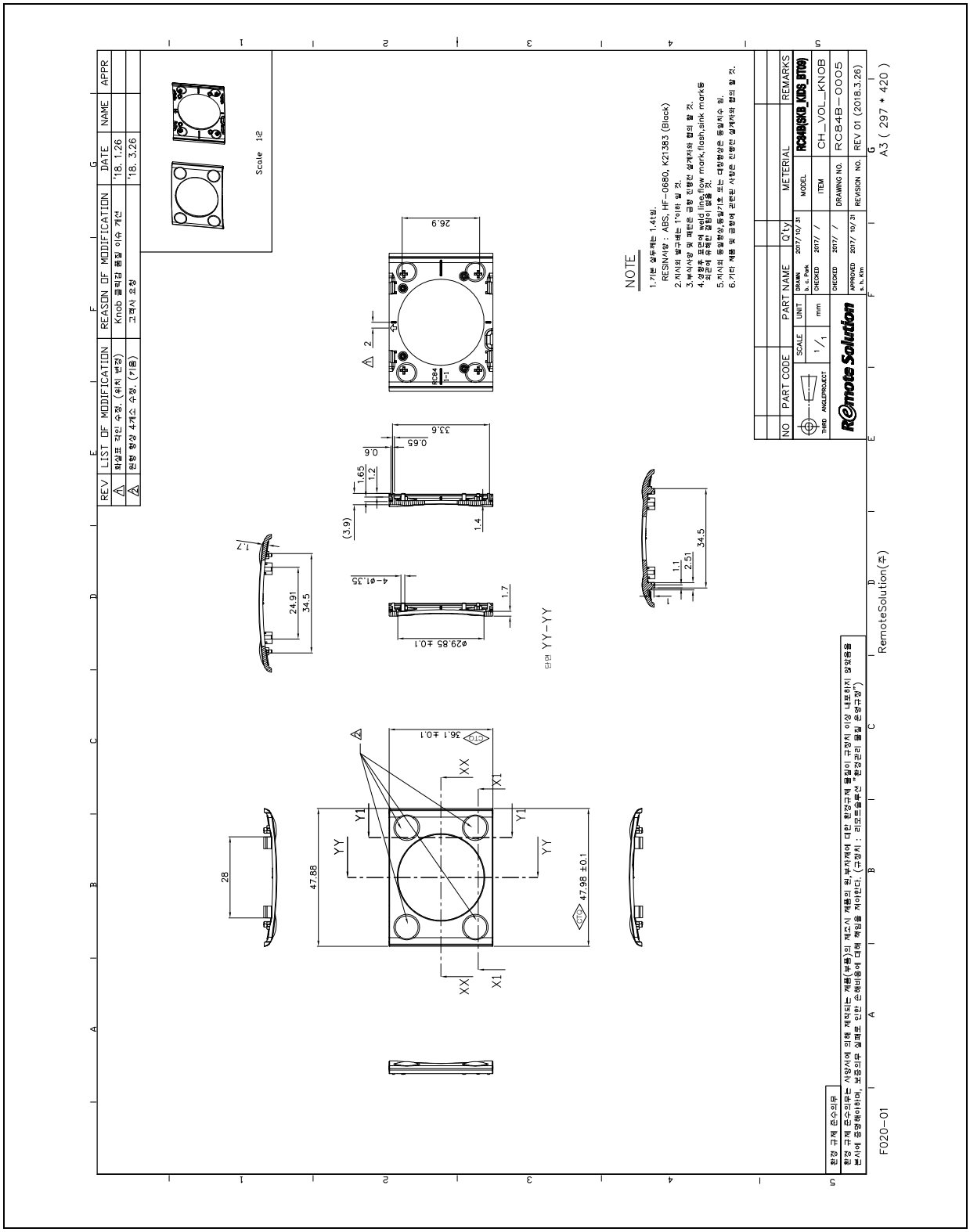

10. Mechanical Spec (6/15) – INDICATOR LED

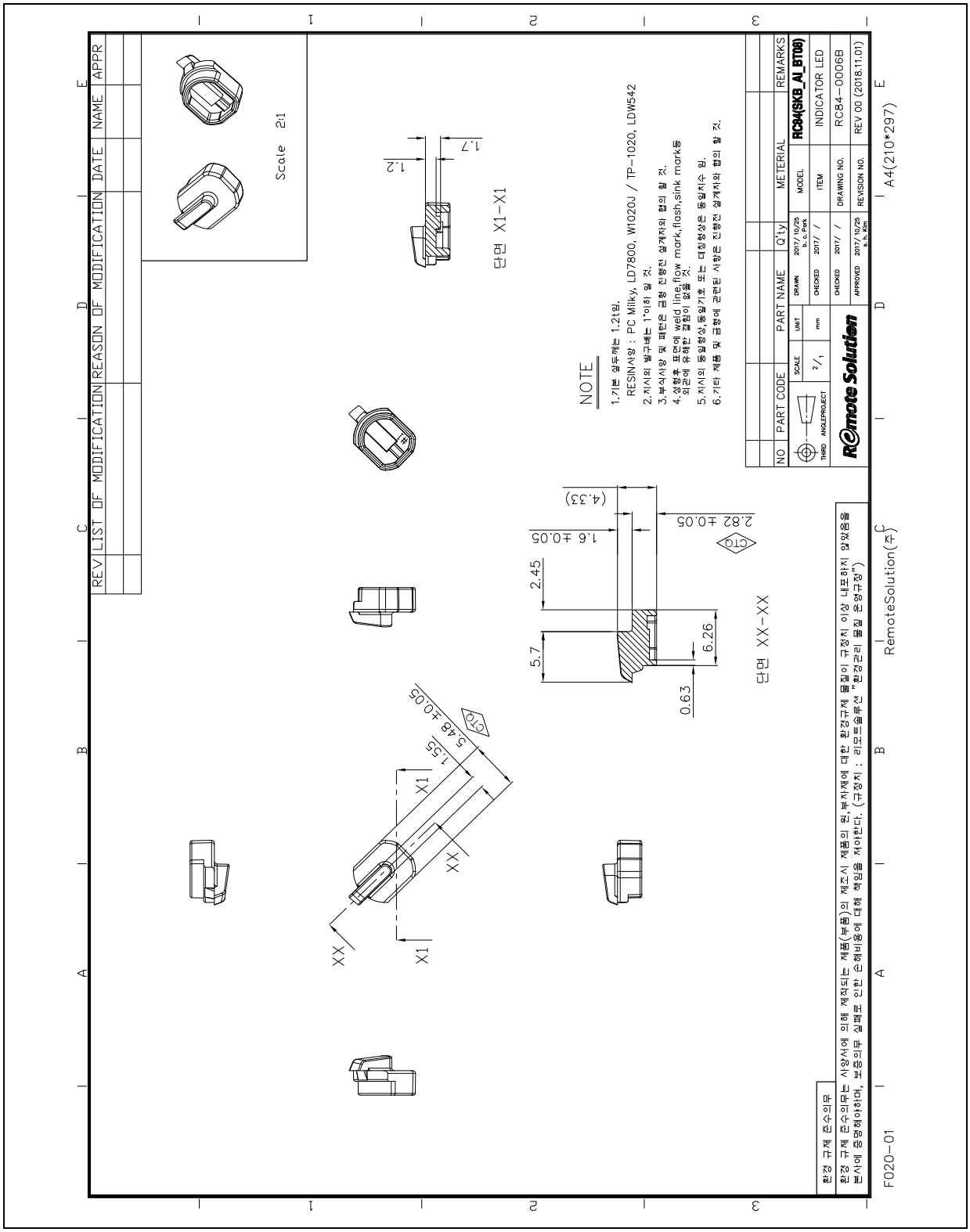

10. Mechanical Spec (7/15) – SIDE KEY MUTE

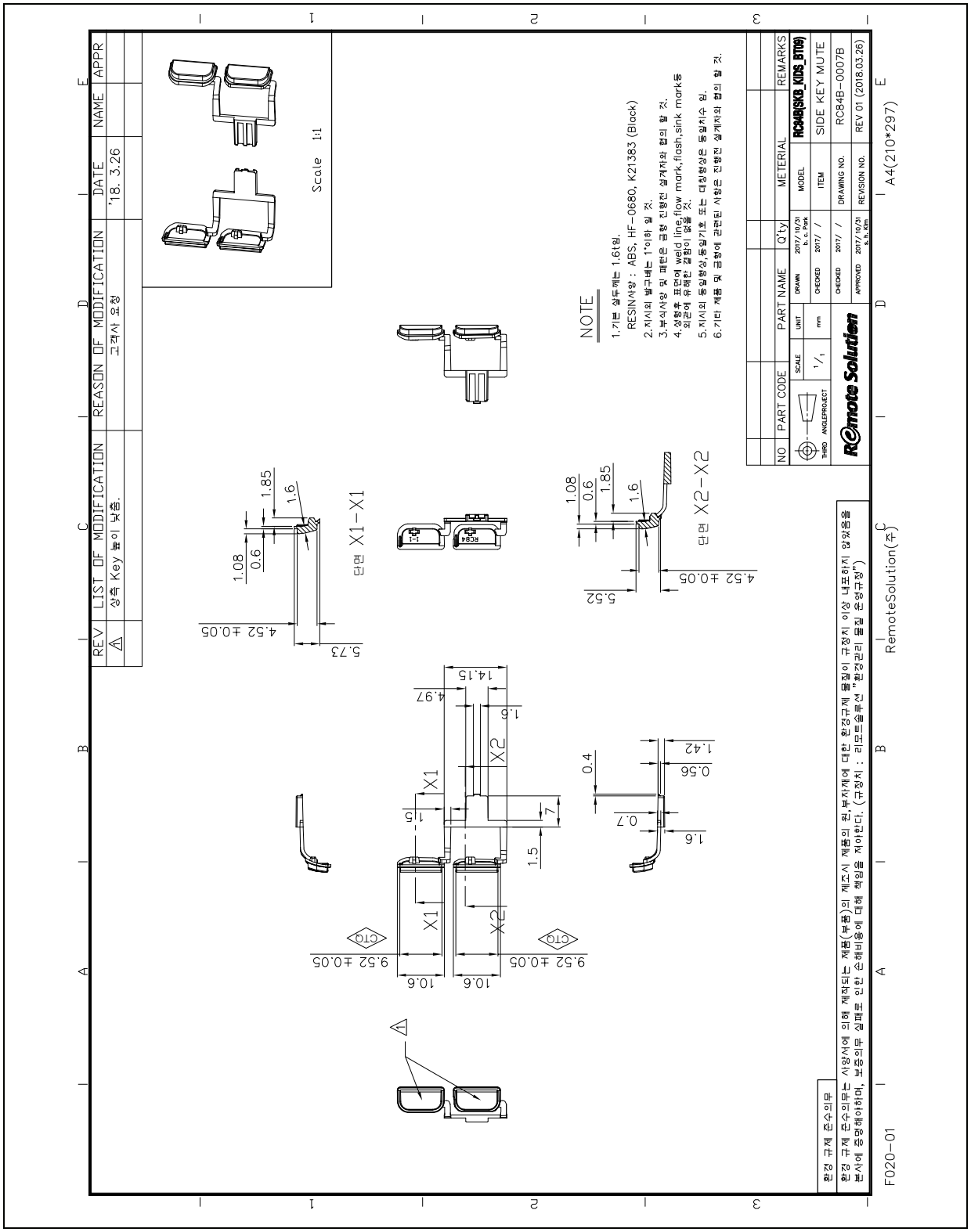

10. Mechanical Spec (8/15) – SIDE KEY VOLUME

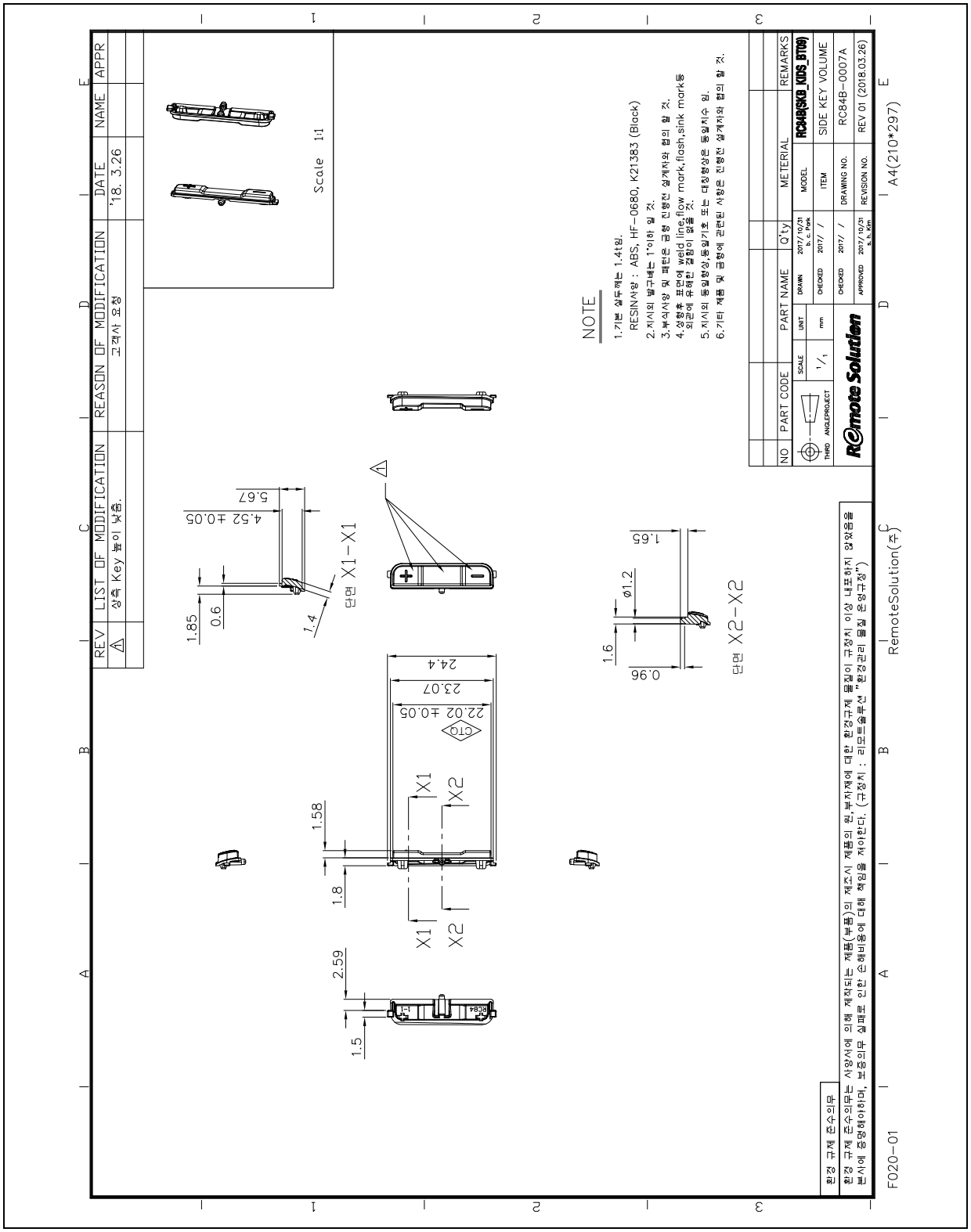

10. Mechanical Spec (9/15) – RUBBER KEYPAD

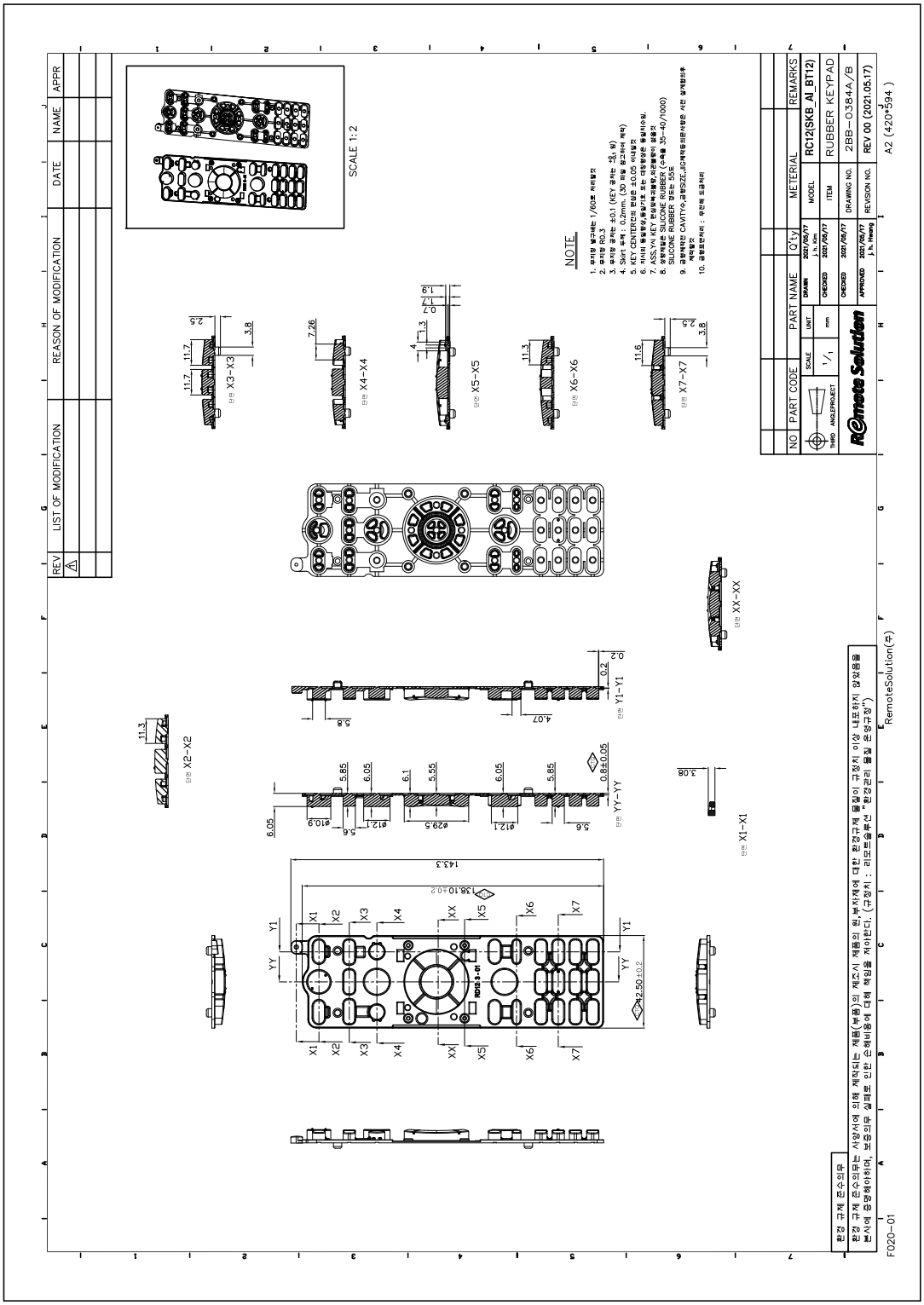

10. Mechanical Spec (10/15) – METAL DOME

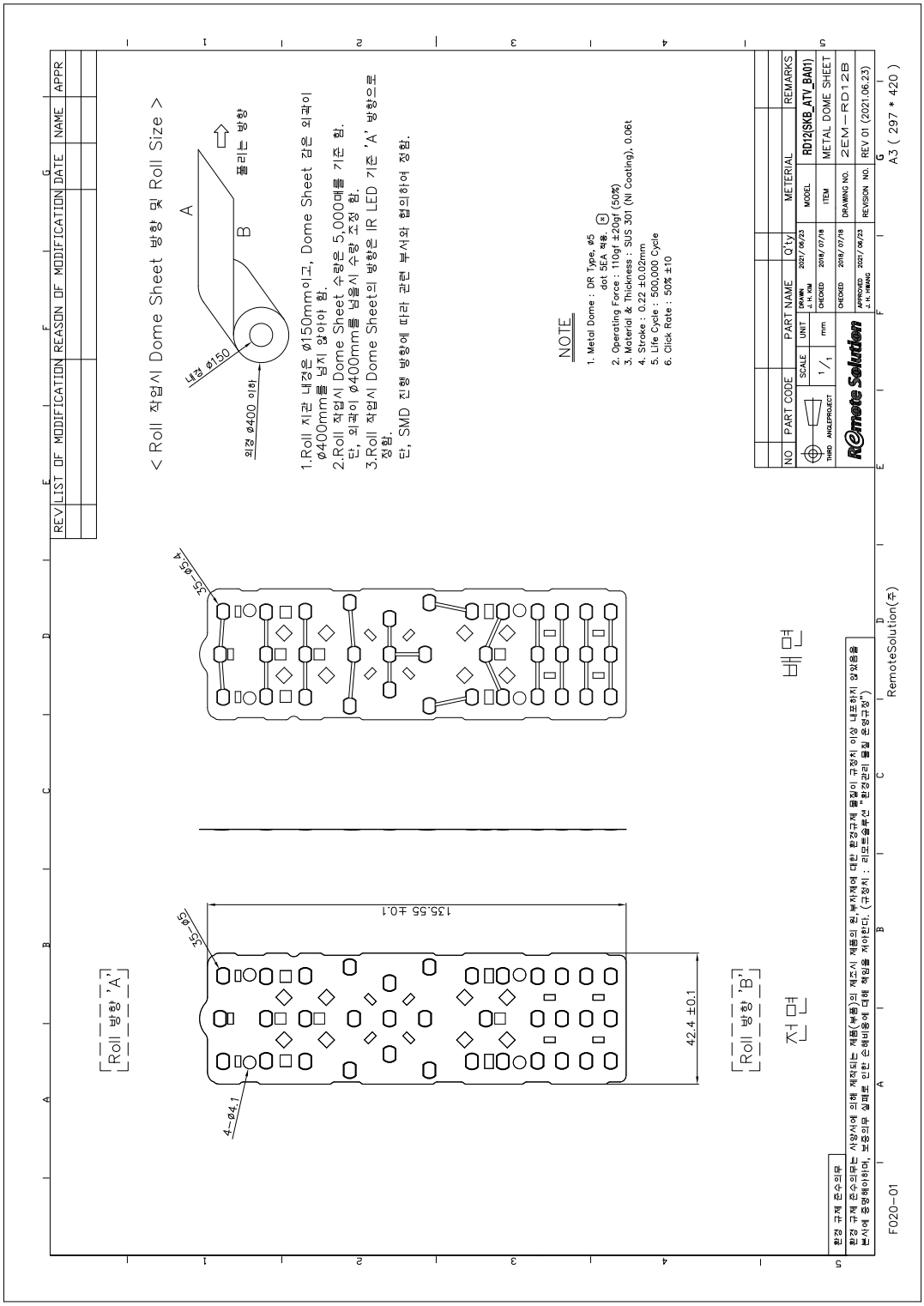

10. Mechanical Spec (11/15) – (+) SPRING

NO	M O D E L	TITLE	MATERIAL	FINISH	REMARK
1					
2					

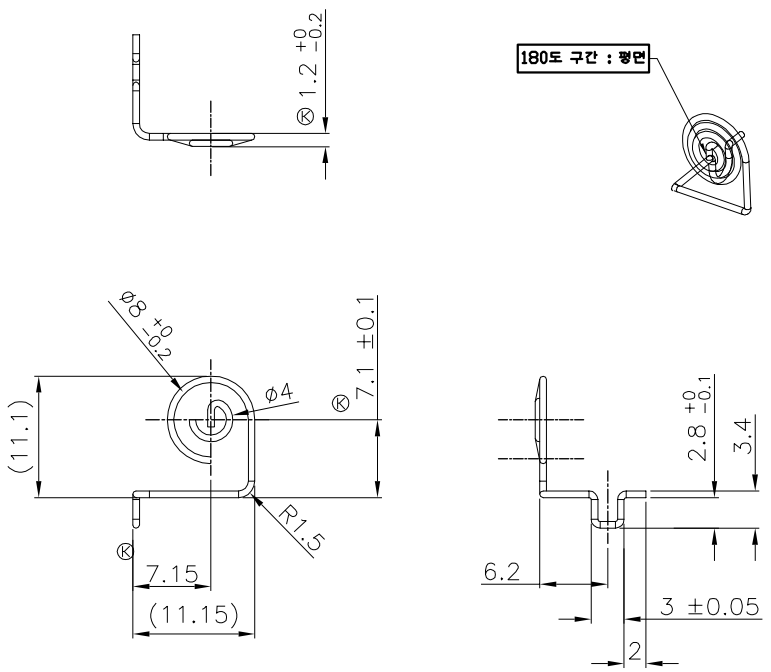

종 류	압 축 SPRING	총 권 수	2.25권
재 질	SUS304-WPB NI-CO	권 방 향	우
선 경	ø0.6	자유장 길이	1.2±0.2

NOTE

1. Ⓚ지시치수 중점관리할것
2. 재료 절단부 처리 주의할것
3. BENDING 부 직각 유지 할 것
   직각부는 필히 자연 "R" 가공 할 것

환경 규제 준수의무

환경 규제 준수의무는 사양서에 의해 제작되는 제품(부품)의 제조시 제품의 원,부자재에 대한 환경규제 물질이 규정치 이상 내포하지 않았음을 본사에 증명해야하며, 보증의무 실패로 인한 손해비용에 대해 책임을 져야한다. (규정치 : 리모트솔루션 "환경관리 물질 운영규정")

NO	PART CODE	PART NAME	Q'ty	METERIAL	REMARKS

SCALE	UNIT			
2/1	mm	DRAWN 2017/10/19 b. c. Park	(+)SPRING	RC84(SKB_AI_BT08)
		CHECKED 2017/10/19 s. b. Lim		
Remote Solution		CHECKED 2017/10/19	ISSUE Z	2SP-RC84
		APPROVED 2017/10/19 s. h. Kim		

F020-01 A4 (210 * 297)

10. Mechanical Spec (12/15) – (-) SPRING

NO	M O D E L	TITLE	MATERIAL	FINISH	REMARK
1					
2					

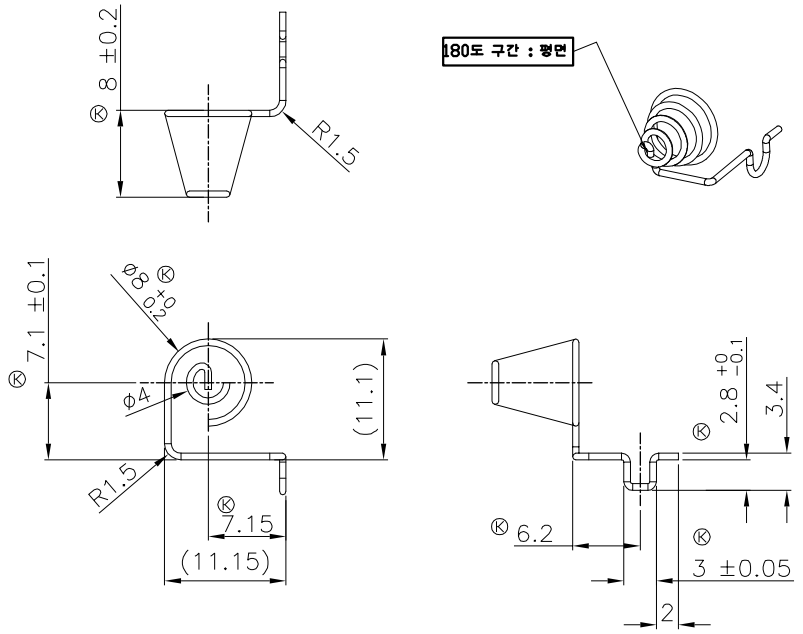

종 류	압 축 SPRING	총 권 수	4.25 권
재 질	SUS304-WPB NI-CO	권 방 향	좌
선 경	ø0.6	자유장 길이	8 ±0.2

NOTE

1. Ⓚ지시치수 중점관리 할 것
2. 재료 절단부 처리 주의 할 것
3. BENDING 부 직각 유지 할 것
   직각부는 필히 자연 "R" 가공 할 것

환경 규제 준수의무

환경 규제 준수의무는 사양서에 의해 제작되는 제품(부품)의 제조시 제품의 원,부자재에 대한 환경규제 물질이 규정치 이상 내포하지 않았음을 본사에 증명해야하며, 보증의무 실패로 인한 손해비용에 대해 책임을 져야한다. (규정치 : 리모트솔루션 "환경관리 물질 운영규정")

NO	PART CODE	PART NAME	Q'ty	METERIAL	REMARKS

SCALE	UNIT			
2/1	mm	DRAWN 2017/10/19 b. c. Park	(-)SPRING	RC84(SKB_AI_BT08)
		CHECKED 2017/10/19 s. b. Lim		
Remote Solution		CHECKED 2017/10/19	ISSUE Z	2SM-RC84
		APPROVED 2017/10/19 s. h. Kim		

F020-01 A4 (210 * 297)

10. Mechanical Spec (13/15) – (±) SPRING

NO	M O D E L	TITLE	MATERIAL	FINISH	REMARK
1					
2					

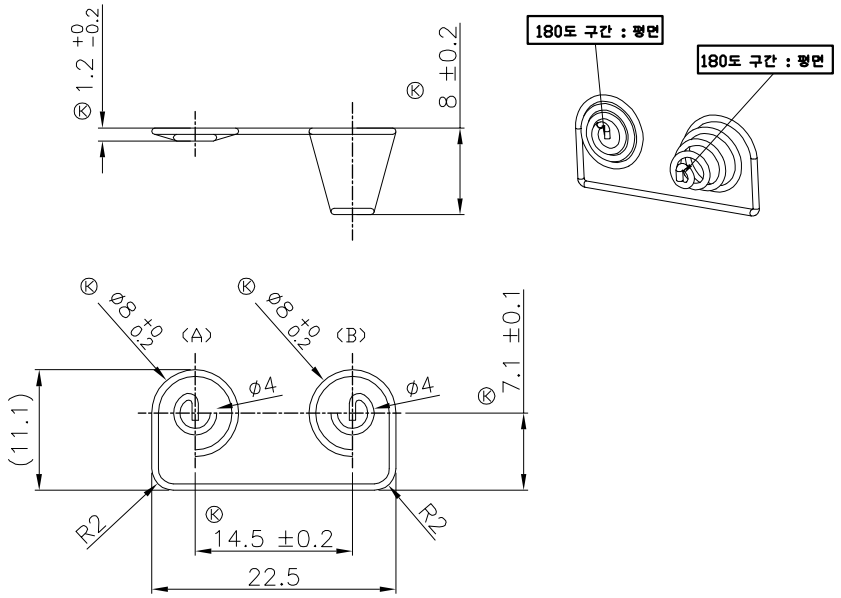

종 류	압 축 SPRING	총 권 수	A	2.25권	B	4.25 권
재 질	SUS304-WPB NI-CO	권 방 향	A	좌	B	우
선 경	ø0.6	자유장 길이	A	1.2 +0 −0.2	B	8 ±0.2

NOTE

1. Ⓚ지시치수 중점관리할것
2. 재료 절단부 처리 주의할것
3. BENDING부 직각유지할것
   직각부는 필히 자연"R"가공할것

환경 규제 준수의무

환경 규제 준수의무는 사양서에 의해 제작되는 제품(부품)의 제조시 제품의 원,부자재에 대한 환경규제 물질이 규정치 이상 내포하지 않았음을 본사에 증명해야하며, 보증의무 실패로 인한 손해비용에 대해 책임을 져야한다. (규정치 : 리모트솔루션 "환경관리 물질 운영규정")

NO	PART CODE	PART NAME	Q'ty	METERIAL	REMARKS

SCALE	UNIT			
2/1	mm	DRAWN 2015/06/01 b. c. Park	COMMON SPRING RC65(SKB_Smart)	
		CHECKED 2015/06/01 s. b. Lim		
Remote Solution		CHECKED 2015/06/01	ISSUE Z	2SC-RC65
		APPROVED 2015/06/01 b. c. Kim		

10. Mechanical Spec (14/15) – MESH

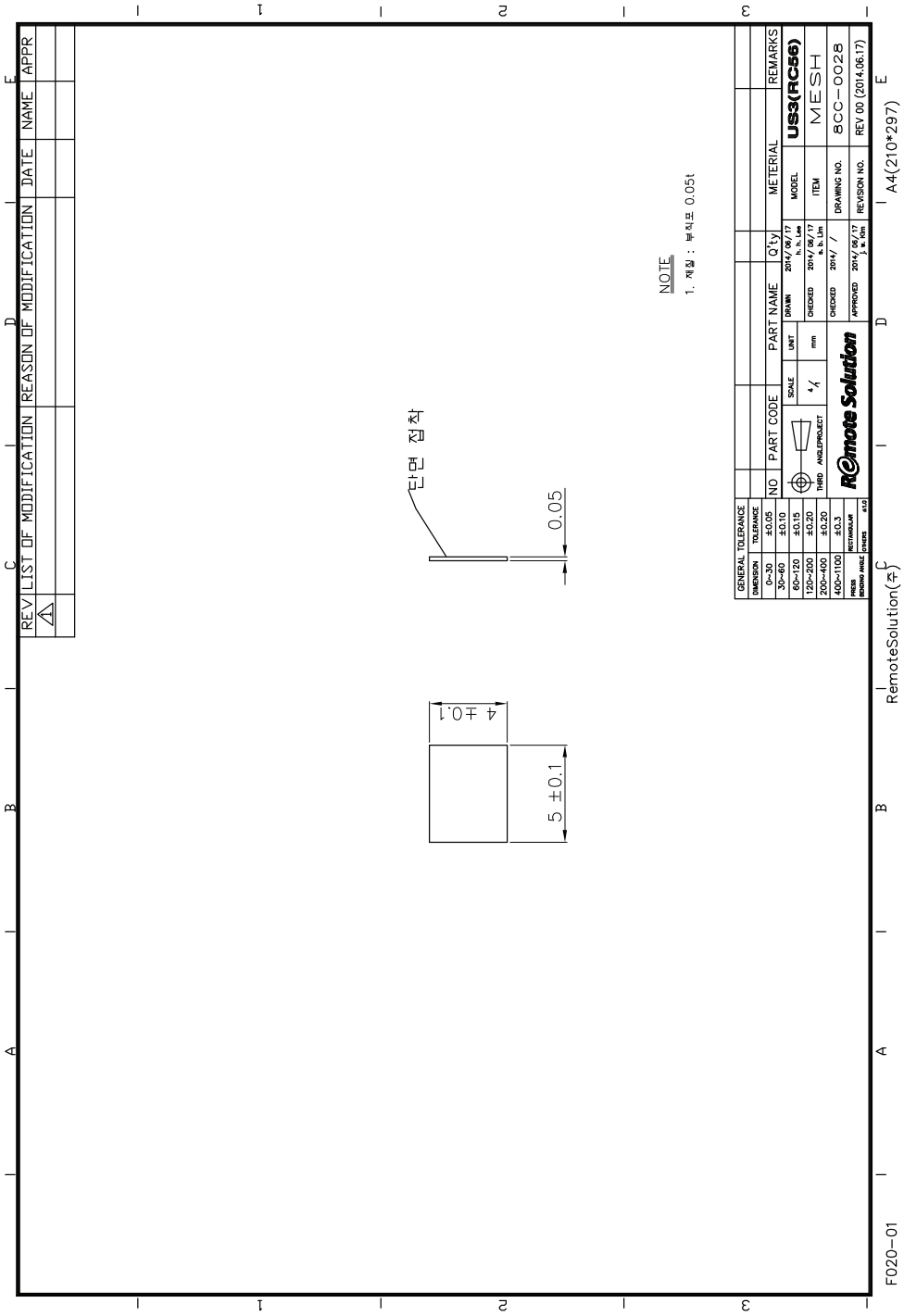

10. Mechanical Spec (15/15) PE BAG

NO	MODEL	TITLE		MATERIAL	FINISH
1					

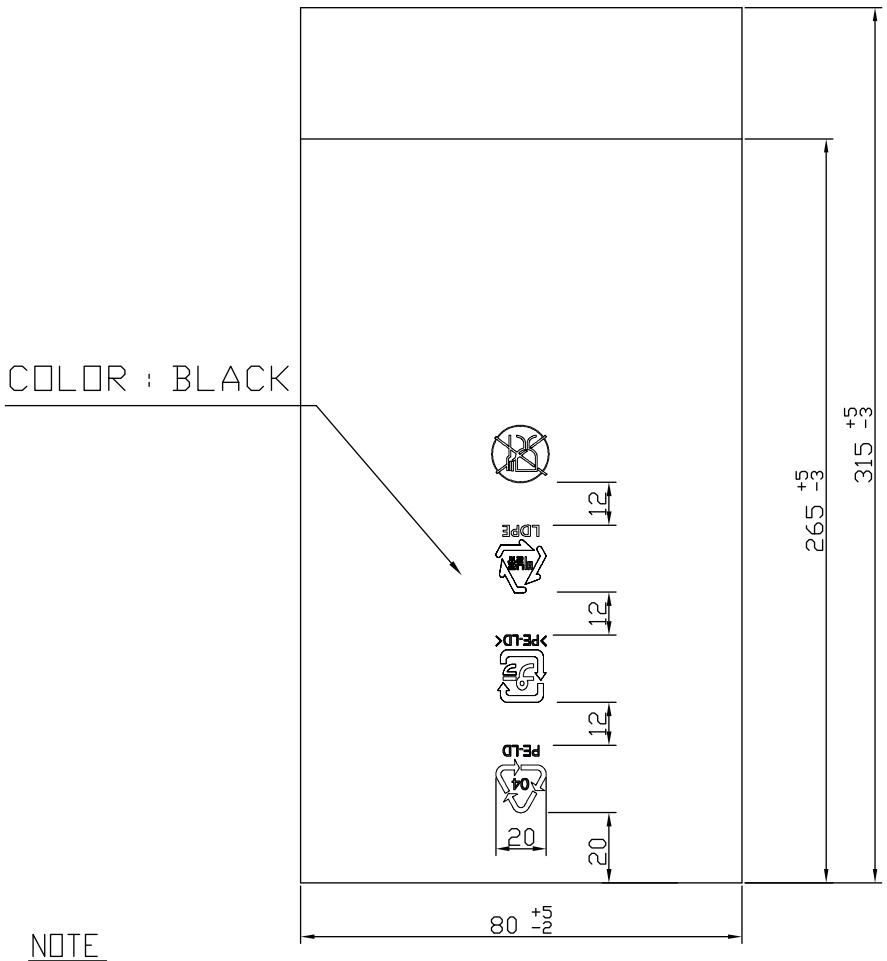

NOTE

1. 도면 치수로 관리 할 것.
2. 재료 : PE 0.05t 투명

⚠ ISSUE NO	MM/DD/YY	SIGNATURE	GHANGE NO	CHANGE CONTENTS

SCALE	UNIT	DRAWN 2014/12/10 h. h. Lee	PE BAG CJ(RC60)
N / S	mm	CHECKED 2014/12/10 s. b. Lim	
Remote Solution		DRAWN 2014/12/10 j. w. Kim	ISSUE Z 7PP-0052T

11. Packaging Specification

10-1 MATERIAL : CARTON

10-2 SIZE : 553 (L)* 415 (W)* 282 (H) (Out Side)

10-3 QUANTITY : 80EA

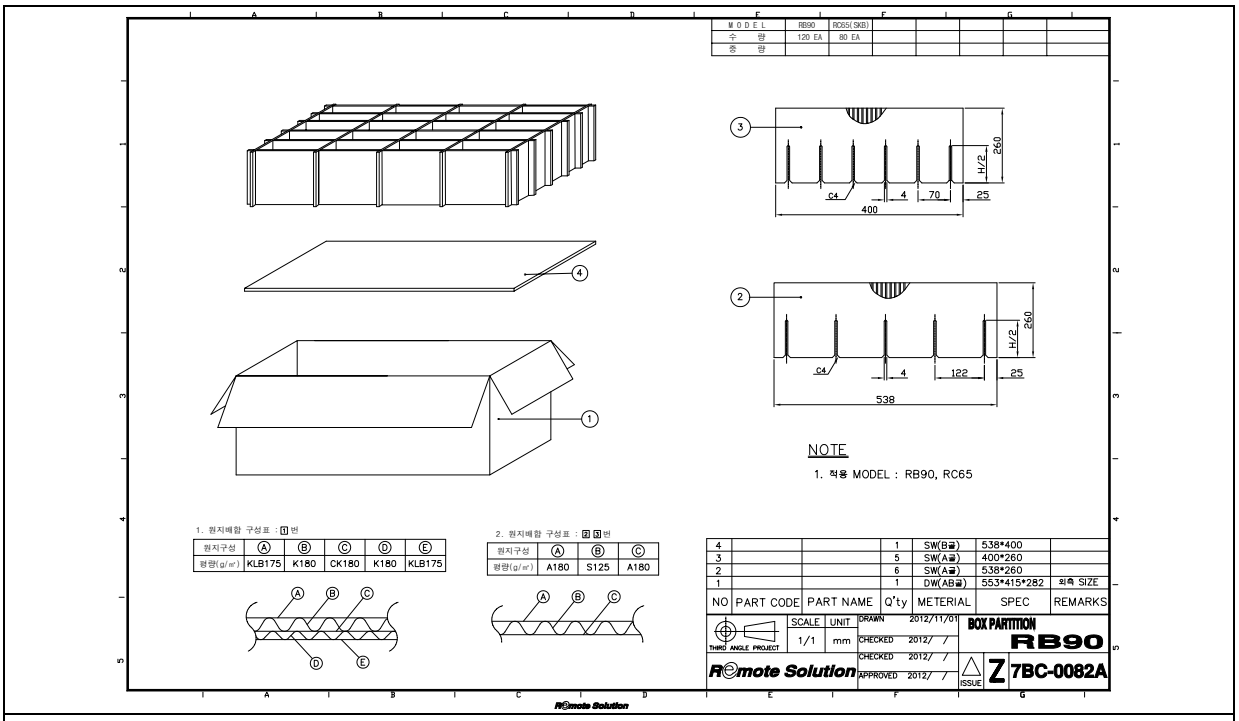

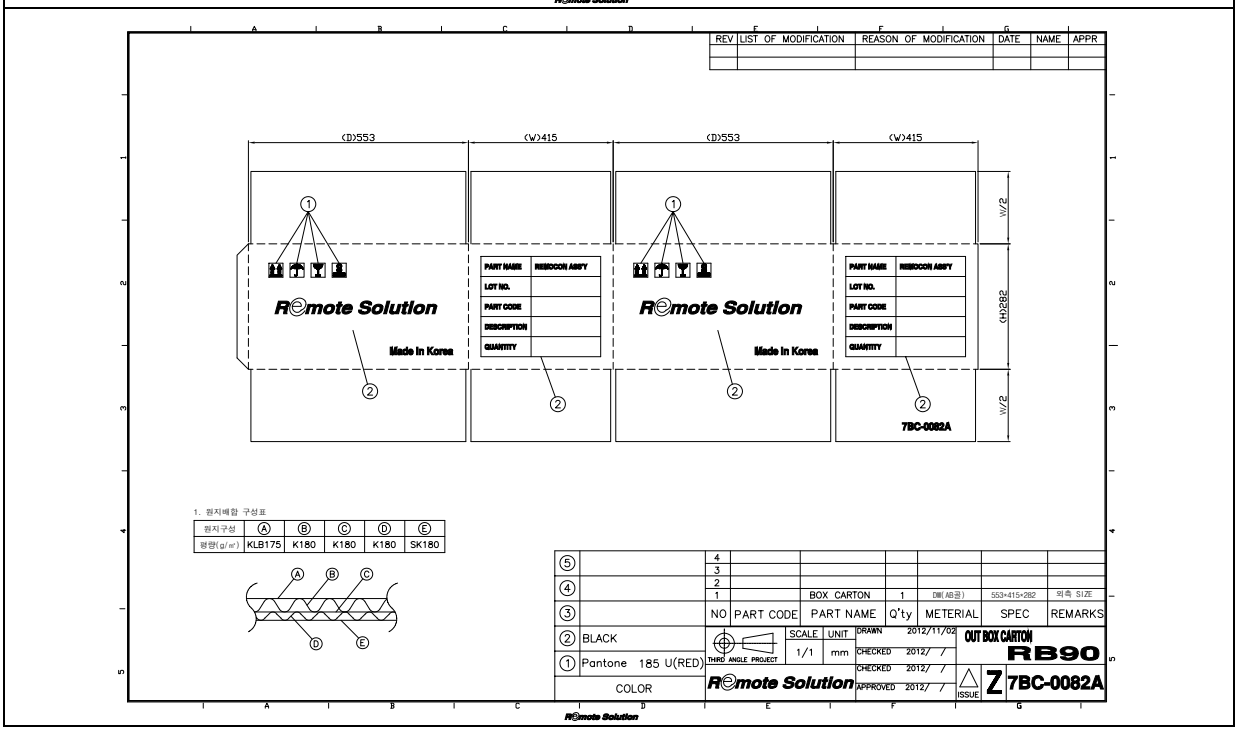

12. Assembling Specification

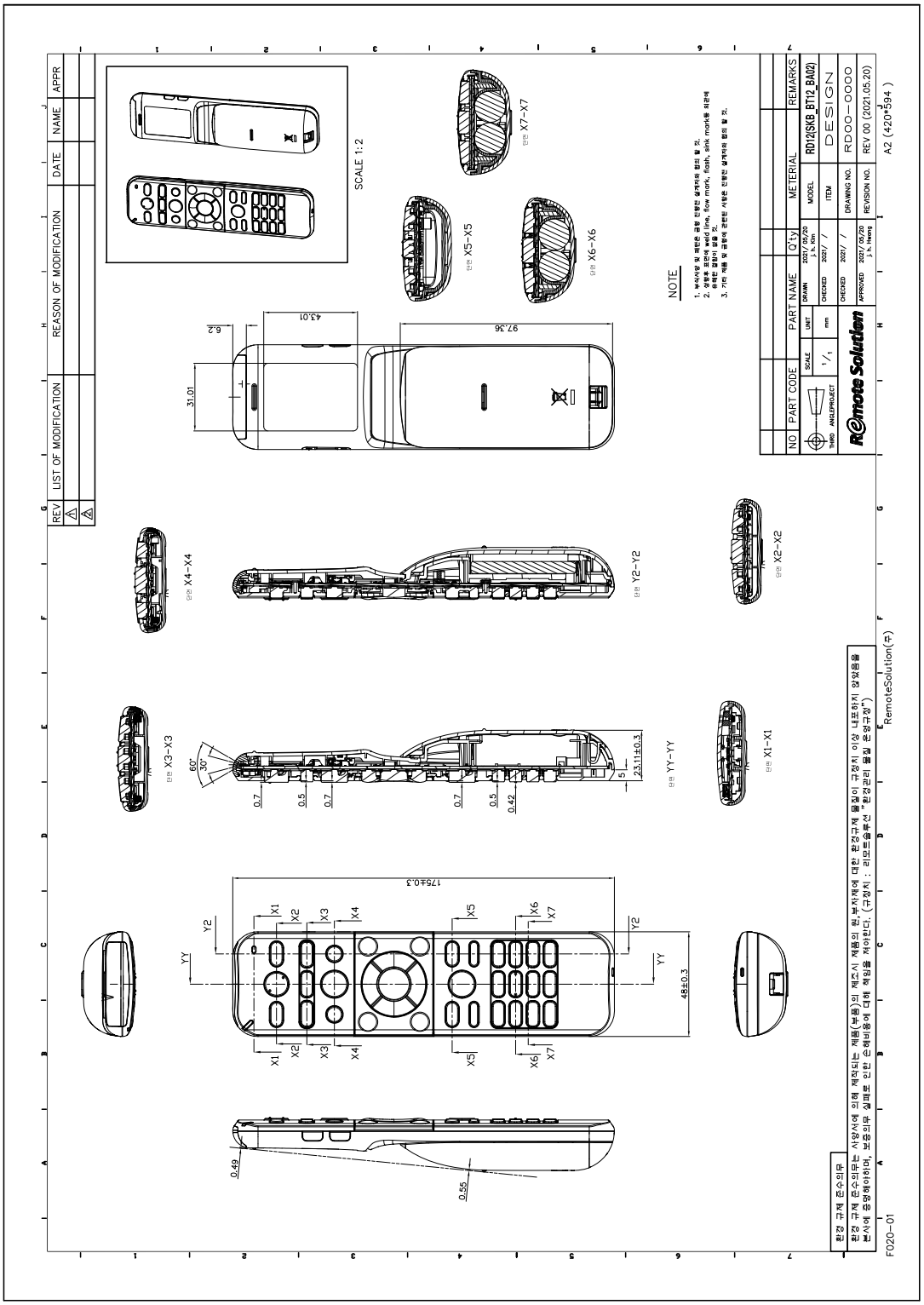

REMOTE SOLUTION CO., LTD.

INSTITUTION : 2021.05.24	SPECIFICATION	MODEL NO :	56
REFORM :			
DECISION : 2024.08.13	(TRANSMITTER REMOCON)	RD12F00	69

13. Rubber Tension Test

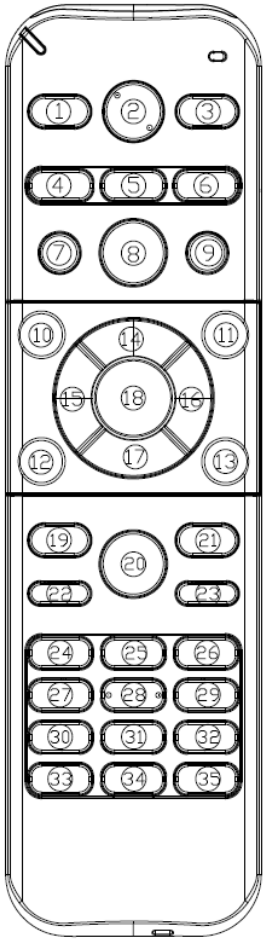

NO.	Tension	Return	NO.	Tension	Return
1	190	113	25	206	125
2	192	109	26	197	123
3	195	108	27	22	130
4	205	120	28	212	125
5	197	122	29	211	116
6	203	120	30	215	130
7	187	112	31	206	112
8	184	116	32	197	118
9	172	110	33	224	129
10	211	126	34	202	110
11	204	129	35	214	115
12	201	125			
13	209	121			
14	201	121			
15	199	105			
16	203	115			
17	197	111			
18	257	152			
19	197	122			
20	201	121			
21	200	116			
22	200	120			
23	192	104			
24	232	148			

Tension Spec :	Small Key : 200 ± 30gr
	Large Key(10,11,12,13,14,15,16,17,18번 Key) : 210 ±30gr

14. Manufacturing Process Flow Chart(1/3) - SMD

Customer	SKB	Process Flow Diagram	Document.No	RS-20210518	Sign	권태걸
Product	BA03		Date	2021.05.18	Review	
Model	RD12F		Part	SMD	Approval	

No.	Revision date	Content	Check	No.	Revision date	Content	Check

Process No		01	02	03	04	05	06	07	08
Process	Outsourcing								
	MAIN								
	SUB								
	Personnel	-	-		-	-	-	-	
Process		LOADER	SCREEN PRINTER	Worktable	CHIP MOUNTER	CHIP MOUNTER	REFLOW	UNLOADER	VISION TEST
Content		.PCB Loading	.Solder Paste Printing	.Spring insert	.Chip Mounting	.Chip Mounting	.Soldering	.PCB Unloading	.PCB Inspection (Solder, part`s)
Machine		LOADER	SCREEN PRINTER	.	CHIP MOUNTER	CHIP MOUNTER	REFLOW	UNLOADER	VISION Machine
Tools		.	.	.Spring Insert Part`s	.	.	.	.	.
Inspection Machine		.	.3D Inspection machine	.	.	.	.	.	.
Focused Management Item		.PCB Loading position	.Solder cream height	.Spring Reverse shovel	.Coordinate value	.Coordinate value	.temperature control	.PCB Loading position	.inspection criteria

RSC-200-D01(Rev.0)

REMOTE SOLUTION CO., LTD.

INSTITUTION : 2021.05.24	SPECIFICATION	MODEL NO :	58
REFORM :			
DECISION : 2024.08.13	(TRANSMITTER REMOCON)	RD12F00	69

14.Manufacturing Process Flow Chart(2/3) - PBA

Customer	SKB	Process Flow Diagram	Document.No	RS-20210518	Sign	권태걸
Product	BA03		Date	2021.05.18	Review	
Model	RD12F		Part	PBA	Approval	

No.	Revision date	Content	Check	No.	Revision date	Content	Check

Process No		01	02	03	04	05	06	07	08
Process	Outsourcing								
	MAIN								
	SUB								
	Personnel								
Process		Dome Sheet	Realtek Writing	leakage current test	IR operation test	date printing marking	Appearance inspection		
Content		.Dome Sheet Attach	.RTL8762CA Writing	.leakage current test	.IR operation test	.date printing marking	.Appearance inspection		
Machine		.Dome Sheet jig	.Writing jig,PC	.PC	.PC	.marking machine			
Tools		.Dome Sheet jig tool	.	.ammeter .POWER Supply	.ammeter .POWER Supply				
Inspection Machine									
Focused Management Item		.Dome Sheet Attachment Check	.Writing Firmware check	.Nonconforming product management	.Nonconforming product management	.Check print status	.Nonconforming product management		

RSC-200-D01(Rev.0)

REMOTE SOLUTION CO., LTD.

INSTITUTION : 2021.05.24	SPECIFICATION	MODEL NO :	59
REFORM :			
DECISION : 2024.08.13	(TRANSMITTER REMOCON)	RD12F00	69

14. Manufacturing Process Flow Chart (3/3) – Assembly

Customer	SKB	Process Flow Diagram	Document.No	RS-20210518	Sign	권태걸
Product	BA03		Date	2021.05.18	Review	
Model	RD12F		Part	Assembly	Approval	

No.	Revision date	Content	Check	No.	Revision date	Content	Check

Process No		01	02	03	04	05	06	07	08
Process	Outsourcing								
	MAIN								
	SUB								
	Personnel								
Process		Preparation work	TOP CASE Assembly	Bottom case Assembly	TOP CASE Assembly	Assembly	backlight TEST	IR CODE TEST	PCB RMC TEST
Content		.battery insert .PE-Bag package	.KNOB Insert .Mike mesh attach	.indicator LED insert .SIDE KEY insert	.PCB cutting & insert .SIDE KEY insert .Rubber insert	.IR Window insert .Assembly	.Attaching protective film .battery insert .backlight TEST	.IR CODE TEST .Back Label attach .SIDE KEY TEST .Back Light TEST	.Pairing TEST .Rssi TEST .Voice TEST .BACK LIGHT CHECK
Machine		.	.					4IN1 Machine	.PC
Tools		.	.	.	.Assembly machine	.Assembly machine	.Darkroom	.IR receiver	.Pairing Dongle
Inspection Machine		.	.	.	.				.Monitor .darkroom box
Focused Management Item		.Scratch	.Scratch	.Scratch	.Scratch	.Assembly Status check	.Attaching protective film	.IR CODE check .LED check	.Rssi Test .PAIRING Test .Voice Test .Unpairing Test

Process No		09	10						
Process	Outsourcing								
	MAIN								
	SUB								
	Personnel								
Process		Appearance inspection	Package						
Content		.BATTERYCOVER inset .Appearance inspection	.PE BAG Package .Passed Label attach .Insert Battery						
Machine			.						
Tools			.						
Inspection Machine			.						
Focused Management Item		.BATTERYCOVER insert .Appearance inspection	.packing quantity						

RSC-200-D01(Rev.0)

REMOTE SOLUTION CO., LTD.

INSTITUTION : 2021.05.24	SPECIFICATION	MODEL NO :	60
REFORM :			
DECISION : 2024.08.13	(TRANSMITTER REMOCON)	RD12F00	69

15. Manufacturing Controlplan (1/2)

Production management plan (Control Plan)

REMOTESOLUTION (KR)

*Manufacture process : SMD | PBA | Assembly

STEPS	ITEMS	Remote Controll	NO	Revision date	The Reason of revision	Man	Review	Appr
☐ Proto	Model	SK Broadband Smart2/3 STB RCU	6					
			5					
■ 양산선행	Part Number	RD12F00	4					
			3					
☐ MP	CFT	PM(HB.Kim), R&D(JH.Kim, YT.Ahn, H.Hong, CH.Kim),Prod.(YR.Na,KH.Noh),Prod.Tech(RK.Kim, TG.Kwon) QC(SG.Son, SM.Kim), Purchase(GJ.Woo). Sale(GH.Lee)	2					
			1	2021.05.19	Initial preparation			

APPROVAL — Set the date : 2021.05.19

made	review		admit
5/19	-	-	5/19

VENDOR CODE — Customer technical acknowledge/date (when required): — Other admit/date (when required)

No.	Process flow chart SUB MAIN	Process	Equipment	NO	Manage the project: Products	Process	special feat	Management Criteria: Standard	How to check	Cycle	Management Plan	Division: PD	QC	Corrective Action	Remark
		Raw material inventory		1	Raw materials	Supplier (warehouse)		Vendor Input							
10	**Incoming inspection**		Visual, Text film	1	Raw materials	A visual inspection (Design)		Don't allow harmful defects	Visual inspection	Sampling	Inspection specification		○	Isolation, return money, Issuance of	
			Vernier caliper	2	Raw materials	The dimensional che	CTQ	In line with the structure drawings - length size managemen	measurement Data	Sampling	Inspection specification		○	Isolation, return money, Issuance of	
			Tension Gauge	3	Raw materials	Characteristics of check		In accordance with specifications of the structures	measurement Data	Sampling	Inspection specification		○	Isolation, return money, Issuance of	
			Visual	4	Raw materials	Combined inspection		After the merger is not allowed to produce abnormal	The assembly	Sampling	Inspection specification		○	Isolation, return money, Issuance of	
			Chamber	5	Raw materials	Reliability Test		Reliability test no abnormalities	measurement Data	once a month	Test specification		○	Isolation, return money, Issuance of	
			EA 1000A Ⅲ	6	Raw materials	Harmful material inspection		Hazardous substances management benchmark	measurement Data	Once a week	Hazardous substances management		○	Isolation, return money, Issuance of	
20		**Materials Warehousing/ releasing**	A material cart	1	Raw materials	FIFO		Confirm materials specifications FIFO management	Now product labeling	Every Lot	ERP P/G(SAP)			solation, return money	
S1		**Prevention of static electricity**	Static Electricity Checker	1	Static Electricity	Management ofstatic Electricity		Should be within Good Zone	Electrostatic tester	once a day	Check Sheet	○		Anti-static shoes and Electrostatic ring to	
S2		**Stirring solder cream**	Solder paste mixer (DMS200)	1	Solder cream	Storage of Solder cream		In cold storage with 5±3℃	Thermometer	once a day	Measurement sheet of temperature	○		Reset, Adjustment	
				2	Solder cream	Stirring of Solder cream		45 sec	Timer	Before using	Management register of Stock and Delivery	○		Reset, Adjustment	
				3	Solder cream	Leaving room temperature		25±5℃, 2Hr (Fool_proof)	Timer	Before using	Management register of Stock and Delivery	○		Reset, Adjustment	
30		**Supplying PCB**	Vaccum Loader (SBSF-200)	1	PCB	Sorting status		For direction to sort out	Visual inspection	1/Lot	-	○		rearrange	
				2	PCB	PCB The installation		PCB Pick upAfter drop phenomenon	Visual inspection	1/Lot	-	○		The new installation	
40		**Cleaning PCB**	PCB Cleaner (PCC-4000)	1	PCB	Cleaning PCB's dirt		Location of brush and Air should be fine	Visual	1/Lot		○		The new setting	
50		**Speading Solder cream**	Screen Printer (HP-520S), Maintain a constant temperature device (HTC-1380)	1	Solder Cream	Squeeze pressure		14-16㎏f	Check Equipment	1/Lot	Equipment checklist	○		From the rear device	
				2	Solder Cream	Squeeze speed/angle		35 ~ 100mm/sec, 60도 (Normal : 70~80㎜/sec)	Check Equipment	1/Lot	Equipment checklist	○		From the rear device	
				3	Solder Cream	Condition of printing solder cream		Tin less, Tin over,No blockage	Visual Inspection (Magnifier)	1/Lot	At the beginning, middle, end	○		From the rear device	
				4	Solder Cream	Keeping internal fixed temperature		23 ~ 27 degrees	Set Display	once a day	-	○		From the set temperature	
				5	Solder Cream	Automatic cleaning -> Metal mask		There should be no scraps around the opening area (Maual Cleaning : 1Time/2Hrs.)	Check Equipment	once in 5 times	Equipment	○		Manual cleaning	
60		SMD components patch	Chip Mount	1	Chip components	Nozzle pressure		Air : 0.45 ~ 0.55 ㎫ Nozzle : -80 ±10 mmHg	Pressure gauge	1time/daily	Equipment work sheet	○		Reset, Adjustment	
				2	Chip components	PMC specification is consistent		Feeder List (MONITOR) *To prevent the mixing system	Visual inspection	When the model changes	Record the account	○		Reset, Adjustment	
				3	Chip components	Part a Pick up location		5~25% of component area	Equipment to confirm	When the model changes	Equipment work sheet	○		Reset, Adjustment	
			이형 Mount (SM421)	4	Chip components	Air/Nozzle pressure		Air : 4.5 ~ 5.5 ㎫ Nozzle : -100 ±10 mmHg	Pressure gauge	1 time/ monthly	equipment work sheet	○		Reset, Adjustment	
				5	Chip components	Part a Pick up location		5~25% of component area	Equipment to confirm	When the model changes	equipment work sheet	○		Reset, Adjustment	
70		**Spring assembly**	Manual work	1	SMD products	Insert the spring (+/-)		Meet standard of BOM	Visual	When receiving material	System (SAP)	○		From the set parameters	
80		**Reflow Soldering**	Reflow Soldering	1	SMD products	Preheat interval		Temperature : 150 ~ 200℃	Preheating temperature Check	1time/ daily	Reflow Profile	○		From the set parameters	
								Soldering time : 90 ~ 130sec	Preheating temperature Check	1time/ daily	Reflow Profile	○		From the set parameters	
				2	SMD products	Soldering	CTQ	Temperature : 200℃ 이상 (peak:235~250℃) - PCB 1.2t / FR-4	Profile Check	1time/ daily	Reflow Profile	○		From the set parameters	
								Soldering time : 40 ~ 70sec	Profile Check	1time/ daily	Reflow Profile	○		From the set parameters	
90		**PCB Out**	SMB-220	1	SMD products	cool down		PCB finishing Impeded (not allowed)	Visual inspection	All	equipment	○		From the set parameters	
100		**visual Inspection**	lupe, Visual	1	SMD products	Confirm the part soldering condition		- no tin, tin, less skewed, plug, inverse interpolation, not advanced - part control within 1/3 of the scope of	Visual Inspection	All	work sheet	○		Identification, Isolation,Repair	
S3		Analysis nonconfirming products and disassembling	Lupe, Iron Solder	1	SMD products	Management of Soldering Iron teamperature	CTQ	Temperature management of soldering iron(380~420℃)	Measuring temperature	once a day	Checklist for temperature of Soldering Iron	○		Reset temperature, Change soldering iron	
110		**Attaching Metal Dome sheet**	MetalDome sheet M/C	1	Raw Materials	Attaching Metal Dome sheet		Adhesion shall be good.	Equipment	All	work sheet	○		Identification, Isolation,Repair	

REMOTE SOLUTION CO., LTD.

INSTITUTION : 2021.05.24	SPECIFICATION	MODEL NO :	61
REFORM :			
DECISION : 2024.08.13	(TRANSMITTER REMOCON)	RD12F00	69

15. Manufacturing Controlplan (2/2)

No.	Process flow chart SUB	MAIN	sub cont	Process	Equipment	Manage the project NO	Producs	Process	Special feat	Management Criteria Standard	How to check	Cycle	Management Plan	Division PD	QC	Corrective Action	Remark
120				Realtek IC Writing	Writing M/C	1	Main PCBA	Realtek IC Writing (RTL8762CA)		Writing(Programming) should be fine - RS / Test Program	Equipment	All	work sheet	○		Identification, Isolation,Repair	
130				Leakage current Inspection	Function Test M/C	1	Main PCBA	Leakage current inspection		Current should be fine (satisfied with the spec')	Equipment	All	work sheet	○		Identification, Isolation,Repair	
140				IR/RF Power & Operating current Inspection	Function Test M/C	1	Main PCBA	IR/RF Operating [Low voltage:2.3V input]		No defect on IR/RF Operating	Equipment	All	work sheet	○		Identification, Isolation,Repair	
						2	Main PCBA	Operating current		Current should be fine (satisfied with the spec')	Equipment	All	work sheet	○		Identification, Isolation,Repair	
150				**Marking**	Marking M/C	1	PCB Assy	Criteria management		Nondefect - Marking manufacture date Defect - Attach nonconforming label	Equipment	All	work sheet	○		Identification, Isolation,Repair	
160				Packing	Magazine	1	PCB Assy	Product Packaging		No model mixing Identification confirmation	Visually	All	equipment	○		Re packing	
S4	NG			**Analysis nonconfirming products and repair**	Magnifier, Soldering Iron, Inspection JIG	1	PCB Assy	Management of Soldering Iron teamperature	CTQ	Temperature management of soldering iron(380~420℃)	Measuring temperature	once a day	Checklist for temperature of Soldering Iron	○		Reset temperature, Change soldering iron	
						2	PCB Assy	Analysis and repair		Should pass retest after repair Should be no issue on soldered point	Function / Current test	nonconfirming	Nonconforming Process checklist	○		Re-test after repair, scrap	
170				Top Case Assebly	Guide cutter	1	PCB Assy	Removing the PCB Guide		PCB without bending. No pattern damage when removing the guide	visually	All	work sheet	○		Isolation,Repair	
				Top Case Assebly	Handwork	2	Top Case, Keypad, Main PCBA	Top Case + Keypad +Main PCBA		Keypad and Main PCBA should not be lifted when seated	visually	All	work sheet	○		Isolation,Repair	
180				Assembling	Handwork	1	Top Assy, Bottom Cover, Filter	Assembling, Top Case Assy + Bottom Cover		There should be no deviations, gaps or gaps in spring Check the filter combination After the provisional match, the full match Be careful not to damage the phone jack during temporary molding	visually	All	work sheet	○		Isolation,Repair	
190				IR Operating Inspection	4IN1 Inspection JIG	1	Finished	IR operation inspection Attach Back Label Side key inspection		No abnormality of Full Key IR output Check LED lighting No side key abnormalities	Equipment	All	work sheet	○		Identification, Isolation,Repair	
200				RF Operating Inspection	RF Inspection JIG	1	Finished Barcode	Pairing RF opertion		Check pairing status and buzzer sound Check RSSI value, SW, FW version Voice and leakage current check Version label (manufacture date)	Visually	All	work sheet	○		Containment, repair	
210				PE-BAG fusion	fusion JIG	1	finished	PFusion of PE-BAG batteries		No abnormality of PE-BAG fusion	Visually	All	work sheet	○		Containment, repair	
220				visual Inspection	Visually	1	finished	Appearance		There should be no abnormality in the state of matching (Gap, step) There should be no abnormality on the IR Filter part's protective skin. No abnormality in specifications, no foreign matter and no marks	Visually	All	work sheet	○		Containment, repair	
						2	finished	Insert PE-BAG batteries		Inserting batteries into PE-BAG	Visually	All	work sheet	○		Containment, repair	
230				Product packing	Handwork	1	finished	Manual, PE-Bag		No manual missing or tearing	Visually	All	work sheet	○		Containment, repair	
						2	finished	Carton Box packaging		There should be no abnormality in mixing and quantitation (Box: 80EA)	Visually	Box	work shhet Barcode label	○		Containment, repair	
S5	NG			Analysis nonconfirming products and repair	Handwork	1	finished	Analyzing and dismantling		Management of equipment and poor performance, Caution and confirmation of parts damage when dismantling	Visually/ Identification label	Nonconforming	Nonconformity Management ledger	○		Re-inspection after repair, Disposal	
						2	finished	Identification Management		Good and non-conforming products should not be mixed		Nonconforming	Nonconformity Management ledger	○		Re-inspection after repair, Disposal	
240				OQC	Pairing Dongle, Inspection P/G, JIG, Power Supply, Currnt metter, Lupe	1	finished	Visual inspection (Design)		There should be no deleterious defect	Standard Sample /Visual	Sampling G-Ⅱ, 0.65	Standard document of test, Inspection Manual		○	Sorting, Rework, Releasing nonconforming	
						2	finished	Function test		Pairing, voice, LED lighting, buzzer, Full Key, i-Set No abnormal operation	Inspection P/G	Sampling G-Ⅱ, 0.65	Standard document of test, Inspection Manual		○	Sorting, Rework, Releasing nonconforming	
						3	finished	Electrical characteristics		1. RF (volume) operation current: TBD 2. IR (TV volume) operating current: TBD 3. Leakage current -Before pairing: (AVR) TBD -After pairing: (AVR) TBD 4. Operating voltage: TBD	Power Supply, currnt meter	Sampling n=5, c=0	Standard document of test, Inspection Manual		○	Sorting, Rework, Releasing nonconforming	
						4	finished	Overhaul		Pattern Open/Short, copper Lift, Cold sold, Solderless, Foreign substances inside, There should be no Missing parts	Visually, Lupe	n=1, c=0	Standard document of test, Inspection Manual		○	Sorting, Rework, Releasing nonconforming	
						5	finished	Condition of packing		There should be no issues with packaging condition, dirt, identification and quantification	VIsual	Sampling Check	Standard document of test, Inspection Manual		○	Sorting, Rework, Releasing nonconforming	
S6				Out Going	Forklift, Truck	1	finished	Product inventory management	CTQ	There should be no issues with quantity of stock, mixing product and condition of storage	Products list	Standby stock	System(SAP)				

REMOTE SOLUTION CO., LTD.

INSTITUTION : 2021.05.24	SPECIFICATION	MODEL NO :	62
REFORM :			
DECISION : 2024.08.13	(TRANSMITTER REMOCON)	RD12F00	69

16. TV Brand List (1/4)

Rev 2.1	2023.02.20 한성컴퓨터 ELEX TV 8430 외 IR DB 61종 업데이트 (신규코드 2종 : 471, 472)
Maker(Brand)Name	**Code number (3 digit) List**
삼성(SAMSUNG)	226 163 218 215 212 206 167 191 162 181 037 183 178 185 232 225 154 092 052 035 034 231 135 157 187 341 465
엘지 (LG,금성,GOLDSTAR)	227 236 206 192 186 193 175 178 185 224 201 092 183 003 002 030 164 168 032 072 031 094 096 417 470
대우(DAEWOO)	014 231 043 190 177 217 176 159 166 233 029 158 150 206 178 185 216 165 169 156 152 155 151 228 195 153 170 188 198 038 160 189 039 199 182 235 092 050 053 202 047 051 179 344 375 420 357
대우루컴즈(DAEWOO LUCOMS)	327 335 350 351 352 353 321
아남(ANAM)	204 174 234 018 019 223 193 180 171 053 220 222 161 095 221 210 211 122 158 049 054 055 069 099 302 357 374 468 355 420
에이텍(ATEC)	031
이레전자(ERAE)	004 006 007 008 011 012 013
덱트론(DECTRON)	033
디보스(DIBOSS)	015 109
디지탈 디바이스(DIGITAL DEVICE)	301 312
디지털스트림테크놀로지(DIGITAL STREAM)	351 360
디지털 싸이노스(DIGIAL CYNOS)	016
삼보컴퓨터(TRIGEM COMPUTER)	332
새찬전자(SAECHAN)	028 041 044
코리아데이타시스템스(KDS)	033 073
티디에스(TDS)	103
트라이뷰(TRIVIEW)	302
프리즘 테크놀로지(PRISM TECHNOLOGY)	303 355 072
하이얼(HAIER)	033 077 078 302 333 345
한국전자(KEC)	053 206
한성(HANSUNG)	378 414 420 321
현대아이티(HYUNDAI IT) -현대이미지퀘스트	022 017 107 108 309
현우 맥 플러스(MCPLUS)	206
휴리프(HULIF)	104
쿠메스전자(QUMES)	106
뉴컴월드(NEWCOMMWORLD)	219
다오코리아(DaoKorea)	304
모뉴얼(Moneual) - 롯데마트	305 306 307 326
드림뷰(DreamView) - 이마트	308 332
노브랜드(No Brand) - 이마트	308 332 330 463 373 351
일렉트로맨(ELECTROMAN) - 이마트	308
제이엘통상(XPEER) - 홈플러스	321
우성엔터프라이즈(WeCube) - 홈플러스	322
티바(TIVA, 스피드테크놀로지)	324
스카이미디어(Vishorn)	325 330 336
동양전자(DONGYANG)	068
비티씨정보통신(BTC)	316
씨마디지텍(CIMADIGITEC)	318 319 072
LS전자(LS ELECTRONICS)	313
모티브씨엔씨(MOTV)	311 378 355
시그마TV(SIGMACOM)	310
유니크로(UNIKRO)	100 317
보임틀(VOIMTLE)	304
보림전자(BOLIM)	028 315 323
3S DIGITAL	028
삼인디스플레이(XSTIM)	104 320 329
유투스(케이엘전자 UTUS)	314
인디텍(VIEWPIA)	107
재원전자(JAEWON)	333
지피앤씨(GPNC)	327 306
제노스미디어(ZENOS)	303 328
제이아이케이솔루션(LEGRAND)	342
파인포스(FINEFORCE)	306
더블유시디(WCD)	331
토마토디스플레이(TOMATO DISPLAY)	337 306 356
넥스디지탈(NEX)	338
매직나라(MAGIC NARA)	332 339
유니크컴퍼니(UNIQUE COMPANY)	340
알파스캔(ALPHASCAN)	306 203 345
야마카시(YAMAKASI, 바이텍코리아)	343 346 347 348 349
자비오씨앤씨(XAVVIO)	354
티베라(TVERA)	355
스카이워스(SKYWORTH)	353
오리온정보통신(TOPSYNC) 오리온(ORION)	351 330 357 306 111 101 072

REMOTE SOLUTION CO., LTD.

INSTITUTION : 2021.05.24	SPECIFICATION	MODEL NO :	63
REFORM :			
DECISION : 2024.08.13	(TRANSMITTER REMOCON)	RD12F00	69

16. TV Brand List (2/4)

한스정보(HANSJUNGBO, HANS TOUCH)	356
샤오미(XIAOMI)	361
디스플레이파크(DISPLAY PARK)	072
스마트홈 일렉트로닉스 - 스마트라 (SMART HOME ELECTRONICS)	362 363 072 420
주연테크(JOOYON)	302 346 373
대유위니아(WINIADAEWOO, WINIADIMCH	338 375
아낙(ANAC)	345
매직뷰(MAGICVU)	355
모넥스(MONEX)	302
엘디케이(LDK)	321 206
와사비망고(WASABIMANGO)	072 419
하이메이드(HIMADE)	072 461
인트로스(INTROS)	072 355
삼화디스플레이(SAMHWA)	072
아도니스 (ADONIS)	355
큐닉스 (QNIX)	370 371 372
와이드뷰 (WIDE VU)	373 360
벡셀 (BEXEL)	350 462
폴라로이드 (POLAROID)	072
클라인즈 (KLEINZ)	373
아인츠 (IEINZ)	373
티비스타 (TVSTAR)	355
더함 TV (THEHAM)	072 351
이엔티비 (ENTV)	374 420
MOZEE	373
시네아이(DLT) -시네EYE	373
ZEPA	373
젠티뷰(ZENTVIEW)	356 373
FIDES	321 072
프리토스 (FREETOSS)	321 373 355
CACC	072
제네시스 (GENESIS)	321 355
이노스 (INNOS)	072 378
스마트뷰 (SMART VIEW)	418 072 467
이스트라(ESTRA)	419 351
COOCAA	353
티지앤컴퍼니(TG&Co.)	332 308
트루비(TRUVI)	419 420
IRIVER(드림어스)	072 420
유맥스(UMAX)	072 420
의영시스템(WOW TV)	357
앤트웍스(ANTWORKS)	330 357
현아이디어(HYNAEDA)	373
지스타(ZSTA)	373
타라엘씨디(TARALCD)	302
인켈(INKEL-SHERWOOD)	209 353 163 072 151 327 350 354 464
호리온(HORION)	419 072 467
NEXTBOOK	419
브라운슈거(BROWN SUGAR)	419
더하이텍(THEHITECH)	344
루브제(LUVZE)	373
브릴리언츠(BRILLIANT)	353
디포인트(DPOINT)	072 462
저스트인테크(JIT)	373
OIC코리아(OIC KOREA, PRISM KOREA)	302
델로라(DELORA)	467
브리드(VRID)	072
TNM	420 355 360 466 378
살루스(SALUS)	462 072 357
라익미(LIKEME)	373 378
리베로(LIBERO)	072
아티브(ARTIVE)	466 467
시티브TV(SEETIVE)	466 467 378
세이키(SEIKI)	378
KONKA	072
APEX	378 462
스마트에버(SMARTEVER)	420
엠제이(MJ)	378
신일전자(SHINIL)	420
중앙디스플레이(JADISPLAY)	072
해커씨앤씨(HACKER)	072
LNP	041
디지털맥스(DIGITALMAX)	462 378
PICO	468
티베스트(TVEST)	469

16. TV Brand List (3/4)

에이스(ACE GLOBAL)	357
와이드테크(WIDE TECH)	360 357
고랩 프리뷰(FREEVIEW)	378
썬루트(SUNROOT)	378
엠베스텍(MBESTEK)	072
이도디스플레이(YIDO DISPLAY)	420
아이사(DAM_TECH_TV)	373 378
지브라(ZVERA)	373
베이직스(BASICS)	467
포유디지탈(아이뮤즈) -FOR YOU DIGITAL	338
마크비전(MARK VISION)	420
리플렉스(REFLEX)	348 420
리치웰(COMODOTV -RICHWELL)	072
델리파스(DELEPHAS)	420 355
써밋티비(SUMMITV)	373 357
포스픽(POSPIC)	420 355
에스지(SG)	373
엘카이(LKAUI)	357 360
경성글로벌코리아(KSGK)	467
티브이지(TVEG)	355
컴스톤(COMSTONE)	355
센티오(SENTIO)	373
티엑스(TX)	357
포에스(FS) 디스플레이	357
롤리(LOLLY)	462
롯데하이마트 (LOTTE HIMART)	420 357
드림 TV (DREAM TV)	357
이디에스(TIVID)	462
와드뷰(WADVIEW)	420
인아큐브(INA)	360
미디어빌리지테크(SEJONG)	471
아이온코리아(BOSSWIZ)	357
익스프레스 럭 코리아 (EXPRESS LUCK KOR	357
피데스(FIDES)	420 373
다우리(DAURI)	355
큐스타(Q.STAR)	467
장은테크(JANGEUN)	355
큐벨(QBELL)	467 355
필루체(FILLUCE)	373
쿠잉(COOING)	357
행운(HAENGWOON)	360
파트로(PATRO)	373
케이티에이코리아(KTA KOREA)	338
유니피엠(UNIPM)	357
에스포 SMART(S4 SMART)	472 357
오토모(AUTOMO)	357
JAMOS	358
A MARK	092 154 193 206
AOC	193 404
AUDIOVOX	038
CANDEL	150 081
CAMEL	366
CETRONIC	053
CHANGHONG	351
CITIZEN	050 052 092 150 163 081
CLASSIC	053
CONCERTO	150
CONTEC	053 135 157
CORONADO	092 154 206
CRAIG	053
CROWN	053 092
CURTIS MATHES	052 092 163
CXC	053
DAYTRON	092
DELL	410
DYNASTY	053
ELECTROHOME	038 092
EMERSON	359 026 038 053 092 111 135 154 206
FUNAI	053 359
FUJITSU	205 412
FUTURETECH	053
GE	042 167 037 049 067 071
GRUNDIG	401

REMOTE SOLUTION CO., LTD.

INSTITUTION : 2021.05.24	SPECIFICATION	MODEL NO :	65
REFORM :			
DECISION : 2024.08.13	(TRANSMITTER REMOCON)	RD12F00	69

16. TV Brand List (4/4)

HISENSE	368
HITACHI	377 009 023 024 025 083 097 098 150 139 206 376
HP	403
INFINITY	068
INSIGNIA	411
JBL	068
JCPENNY	052 092 089
JVC	058 066 092 070 071 321
KENWOOD	058 070 415
KIVI	420
KLOSS	082
KMC	092 154 206
KTV	053 092 154 250
LUXMAN	051 150
LXI	151 167 037 068 090
MAGNAVOX	001 150 154 167 037 068 206 185 081 082 085
MARANTZ	068 108
MATSUI	068
METZ	408 462 353
MGA	150
MITSUBISHI	074 075 076 105 150
MTC	052 150 163
NAD	090
NEC	005 014 042 105 150 151 152 413
NIKEI	053
ONKING	053
ONTEC	053
ONWA	053
PANASONIC	095 161 049 054 055 223 067 068 238 061 069 071 250
PENNEY	150 163 167
PHILCO	150 154 167 037 068 206 185 081 082 085
PHILIPS	026 066 120 150 154 167 203 037 068 206 236 178 185 081 082 085 086 087 312
PIONEER	002 003 027 097 367
PORTLAND	092 150 154 206
PROTON	032 092 122
QUASAR	049 067 071 250
RADIO SHACK	053 185 092
RCA	010 097 150 167 037 370
RUNCO	416
REALISTIC	053
SANYO	020 102 151
SCOTT	053 092
SEARS	092 150 151 163 167 037 206 089 090
SHARP	001 062 063 064 065 092 208 206
SONY	048 060 059 058 057 056 207 115 194 147 070 139 045 046 080
SOUNDESIGN	053 081
SPECTRICON	193
SSS	053
SYLVANIA	051 150 167 185 037 068 081 082 085
TATUNG	049
TCL	334 009 369 376 460 461
TEAC	407
TECHNICS	095 071
TECHWOOD	150
TEKNIKA	053 092 150 154 163 165 052 206 081
THOMSON	409
TMK	150
TOSHIBA	021 052 105 163 088 151 089 090 091 093
TOTEVISION	092
UNIDEN	406
VICTOR	066
VIDTECH	150
VIEWSONIC	405
VIZIO	364
WARDS	092 150 154 167 185 037 068 071 206 085
WESTING HOUSE	038 014 402
YAMAHA	150
YUPITERUZENITH	053
ZENITH	050 084 072
ZONDA	193

17. Grouping brand list (1/4)

	Maker(Brand)Name	Code number (3 digit) List
GROUP 01	삼성(SAMSUNG)	226 163 218 215 212 206 167 191 162 181 037 183 178 185 232 225 154 092 052 035 034 231 135 157 187 341 465
GROUP 02	엘지(LG,금성,GOLDSTAR)	227 236 206 192 186 193 175 178 185 224 201 092 183 003 002 030 164 168 032 072 031 094 096 417 470
GROUP 03	대우(DAEWOO)	014 231 043 190 177 217 176 159 166 233 029 158 150 206 178 185 216 165 169 156 152 155 151 228 195 153 170 188 198 038 160 189 039 199 182 235 092 050 053 202 047 051 179 344 375 420 357
	대우루컴즈(DAEWOO LUCOMS)	327 335 350 351 352 353 321
	아남(ANAM)	204 174 234 018 019 223 193 180 171 053 220 222 161 095 221 210 211 122 158 049 054 055 069 099 302 357 374 468 355 420
	이레전자(ERAE)	004 006 007 008 011 012 013
	디지탈 디바이스(DIGITAL DEVICE)	301 312
	디지털스트림테크놀로지(DIGITAL STREAM)	351 360
	삼보컴퓨터(TRIGEM COMPUTER)	332
	코리아데이타시스템스(KDS)	033 073
	티디에스(TDS)	103
	트라이뷰(TRIVIEW)	302
	프리즘 테크놀로지(PRISM TECHNOLOGY)	303 355 072
	한국전자(KEC)	053 206
	현대아이티(현대이미지퀘스트)	022 017 107 108 309
	현우 맥 플러스(MCPLUS)	206
	휴리프(HULIF)	104
	쿠메스전자(QUMES)	106
	다오코리아(DaoKorea)	304
	모뉴엘(Moneual) - 롯데마트	305 306 307 326
	드림뷰(DreamView) - 이마트	308 332
	노브랜드(No Brand) - 이마트	308 332 330 463 373 351
	일렉트로맨(ELECTROMAN) - 이마트	308
	제이엘통상(XPEER) - 홈플러스	321
	우성엔터프라이즈(WeCube) - 홈플러스	322
	티바(TIVA, 스피드테크놀로지)	324
	스카이미디어(Vishorn)	325 330 336
	동양전자(DONGYANG)	068
	비티씨정보통신(BTC)	316
	씨마디지텍(CIMADIGITEC)	318 319 072
	LS전자(LS ELECTRONICS)	313
	모티브씨엔씨(MOTV)	311 378 355
	시그마TV(SIGMACOM)	310
	유니크로(UNIKRO)	100 317
	보임틀(VOIMTLE)	304
	보림전자(BOLIM)	028 315 323
	삼인디스플레이(XSTIM)	104 320 329
	유투스(케이엘전자 UTUS)	314
	인디텍(VIEWPIA)	107
	재원전자(JAEWON)	333
	지피앤씨(GPNC)	327 306
	제노스미디어(ZENOS)	303 328
	제이아이케이솔루션(LEGRAND)	342
	파인포스(FINEFORCE)	306
	더블유시디(WCD)	331
	토마토디스플레이(TOMATO DISPLAY)	337 306 356
	넥스디지탈(NEX)	338
	매직나라(MAGIC NARA)	332 339
	유니크컴퍼니(UNIQUE COMPANY)	340
	알파스캔(ALPHASCAN)	306 203 345
	야마카시(YAMAKASI, 바이텍코리아)	343 346 347 348 349
	자비오씨앤씨(XAVVIO)	354
	티베라(TVERA)	355
	스카이워스(SKYWORTH)	353
	오리온정보통신(TOPSYNC) 오리온(ORION)	351 330 357 306 111 101 072
	한스정보(HANSJUNGBO, HANS TOUCH)	356
	샤오미(XIAOMI)	361
	디스플레이파크(DISPLAY PARK)	072
	스마트홈 일렉트로닉스 - 스마트라 (SMART HOME ELECTRONICS)	362 363 072 420
	주연테크(JOOYON)	302 346 373
	대유위니아(WINIADAEWOO, WINIADIMCH	338 375
	아낙(ANAC)	345
	매직뷰(MAGICVU)	355
	모넥스(MONEX)	302

17. Grouping brand list (2/4)

	엘디케이(LDK)	321 206
	와사비망고(WASABIMANGO)	072
	하이메이드(HIMADE)	072 461
	인트로스(INTROS)	072 355
	삼화디스플레이(SAMHWA)	072
	JAMOS	358
	CAMEL	366
	아도니스(ADONIS)	355
	큐닉스(QNIX)	370 371 372
	와이드뷰 (WIDE VU)	373 360
	벡셀 (BEXEL)	350 462
	폴라로이드 (POLAROID)	072
	클라인즈 (KLEINZ)	373
	아인즈 (IEINZ)	373
	티비스타 (TVSTAR)	355
	더함 TV (THEHAM)	072 351
	이엔티비 (ENTV)	374 420
	MOZEE	373
	시네아이(DLT) -시네EYE	373
	ZEPA	373
	젠티뷰(ZENTVIEW)	356 373
	FIDES	321 072
	프리토스 (FREETOSS)	321 373 355
	CACC	072
	제네시스 (GENESIS)	321 355
GROUP 04	이노스 (INNOS)	072 378
	한성(HANSUNG)	378 414 420 321
	스마트뷰 (SMART VIEW)	418 072 467
	이스트라(ESTRA)	419 351
	COOCAA	353
	티지앤컴퍼니(TG&Co.)	332 308
	트루비(TRUVI)	419 420
	IRIVER(드림어스)	072 420
	유맥스(UMAX)	072 420
	의영시스템	357
	앤트웍스(ANTWORKS)	330 357
	현아이디어(HYUNIDEA)	373
	지스타(ZSTA)	373
	타라엘씨디(TARALCD)	302
	호리온(HORION)	419 072 467
	NEXTBOOK	419
	브라운슈거(BROWN SUGAR)	419
	더하이텍(THEHITECH)	344
	루브제(LUVZE)	373
	브릴리언츠(BRILLIANT)	353
	디포인트(DPOINT)	072 462
	저스트인테크(JIT)	373
	OIC코리아(OIC KOREA, PRISM KOREA)	302
	델로라(DELORA)	467
	브리드(VRID)	072
	TNM	420 355 360 466 378
	살루스(SALUS)	462 072 357
	라익미(LIKEME)	373 378
	리베로(LIBERO)	072
	아티브(ARTIVE)	466 467
	시티브TV(SEETIVE)	466 467 378
	세이키(SEIKI)	378
	KONKA	072
	APEX	378 462
	스마트에버(SMARTEVER)	420
	엠제이(MJ)	378
	신일전자(SHINIL)	420
	중앙디스플레이(JADISPLAY)	072
	해커씨앤씨(HACKER)	072
	LNP	041
	디지털맥스(DIGITALMAX)	462 378
	PICO	468
	티베스트(TVEST)	469
	에이스(ACE GLOBAL)	357
	와이드테크(WIDE TECH)	360 357
	고랩 프리뷰(FREEVIEW)	378
	썬루트(SUNROOT)	378
	엠베스텍(MBESTEK)	072
	이도디스플레이(YIDO DISPLAY)	420
	아이사(DAM_TECH_TV)	373 378

17. Grouping brand list (3/4)

	지브라(ZVERA)	373
	베이직스(BASICS)	467
	포유디지탈(아이뮤즈) -FOR YOU DIGITAL	338
	마크비전(MARK VISION)	420
	리플렉스(REFLEX)	348 420
	리치웰(COMODOTV -RICHWELL)	072
	델리파스(DELEPHAS)	420 355
	써밋티비(SUMMITV)	373 357
	포스픽(POSPIC)	420 355
	에스지(SG)	373
	엘카이(LKAUI)	357 360
	경성글로벌코리아(KSGK)	467
	티브이지(TVEG)	355
	컴스톤(COMSTONE)	355
	센티오(SENTIO)	373
	티엑스(TX)	357
	포에스(FS) 디스플레이	357
	롤리(LOLLY)	462
	롯데하이마트 (LOTTE HIMART)	420 357
	드림 TV (DREAM TV)	357
	이디에스(TIVID)	462
	와드뷰(WADVIEW)	420
	인아큐브(INA)	360
	미디어빌리지테크(SEJONG)	471
	아이온코리아(BOSSWIZ)	357
	익스프레스 럭 코리아 (EXPRESS LUCK KORE	357
	피데스(FIDES)	420 373
	다우리(DAURI)	355
	큐스타(Q.STAR)	467
	장은테크(JANGEUN)	355
	큐벨(QBELL)	467 355
	필루체(FILLUCE)	373
	쿠잉(COOING)	357
	행운(HAENGWOON)	360
	파트로(PATRO)	373
	케이티에이코리아(KTA KOREA)	338
	유니피엠(UNIPM)	357
	에스포 SMART(S4 SMART)	472 357
	오토모(AUTOMO)	357

GROUP 05	SONY	048 060 059 058 057 056 207 115 194 147 070 139 045 046 080
	PANASONIC	095 161 049 054 055 223 067 068 238 061 069 071 250
	NEC	005 014 042 105 150 151 152 413
	JVC	058 066 092 070 071 321
	SANYO	020 102 151
	PIONEER	002 003 027 097 367
	FUJITSU	205 412

GROUP 06	SHARP	001 062 063 064 065 092 208 206
	HITACHI	377 009 023 024 025 083 097 098 150 139 206 376
	HP	403
	TOSHIBA	021 052 105 163 088 151 089 090 091 093
	MITSUBISHI	074 075 076 105 150

GROUP 07	PHILIPS	026 066 120 150 154 167 203 037 068 206 236 178 185 081 082 085 086 087 312
	하이얼(HAIER)	033 077 078 302 333 345
	HISENSE	368
	ZENITH	050 084 072
	CANDEL	150 081
	EMERSON	359 026 038 053 092 111 135 154 206
	GE	042 167 037 049 067 071
	GRUNDIG	401
	MAGNAVOX	001 150 154 167 037 068 206 185 081 082 085
	A MARK	092 154 193 206
	PENNEY	150 163 167

	에이텍(ATEC)	031
	3S DIGITAL	028
	뉴컴월드(NEWCOMMWORLD)	219
	디지털 싸이노스(DIGIAL CYNOS)	016
	새찬전자(SAECHAN)	028 041 044
	AOC	193 404
	AUDIOVOX	038
	CETRONIC	053

17. Grouping brand list (4/4)

GROUP 08	CHANGHONG	351
	CITIZEN	050 052 092 150 163 081
	CLASSIC	053
	CONCERTO	150
	CONTEC	053 135 157
	CORONADO	092 154 206
	CRAIG	053
	CROWN	053 092
	CURTIS MATHES	052 092 163
	CXC	053
	DAYTRON	092
	DELL	410
	DYNASTY	053
	덱트론(DECTRON)	033
	디보스(DIBOSS)	015 109
	ELECTROHOME	038 092
	FUNAI	053 359
	FUTURETECH	053

GROUP 09	INFINITY	068
	INKEL	209 353 163 072 151 327 350 354 464
	INSIGNIA	411
	JBL	068
	JCPENNY	052 092 089
	KENWOOD	058 070 415
	KIVI	420
	KLOSS	082
	KMC	092 154 206
	KTV	053 092 154 250
	LUXMAN	051 150
	LXI	151 167 037 068 090
	MARANTZ	068 108
	MATSUI	068
	METZ	408 462 353
	MGA	150
	MTC	052 150 163
	NAD	090
	NIKEI	053
	ONKING	053
	ONTEC	053
	ONWA	053
	PHILCO	150 154 167 037 068 206 185 081 082 085
	PORTLAND	092 150 154 206
	PROTON	032 092 122
	QUASAR	049 067 071 250
	RADIO SHACK	053 185 092
	RCA	010 097 150 167 037 370
	RUNCO	416
	REALISTIC	053
	SCOTT	053 092
	SEARS	092 150 151 163 167 037 206 089 090
	SOUNDESIGN	053 081
	SPECTRICON	193
	SSS	053
	SYLVANIA	051 150 167 185 037 068 081 082 085
	TATUNG	049
	TCL	334 009 369 376 460 461
	TEAC	407
	TECHNICS	095 071
	TECHWOOD	150
	TEKNIKA	053 092 150 154 163 165 052 206 081
	THOMSON	409
	TMK	150
	TOTEVISION	092
	UNIDEN	406
	VICTOR	066
	VIDTECH	150
	VIEWSONIC	405
	VIZIO	364
	WARDS	092 150 154 167 185 037 068 071 206 085
	WESTING HOUSE	038 014 402
	YAMAHA	150
	YUPITERUZENITH	053
	ZONDA	193